REVISIONS				
ECN	REV	DESCRIPTION	DATE	BY/APPVL
10207	00	NEW	09-07-10	DJB/JDN

NFPA J-BOX

KIT 4236705

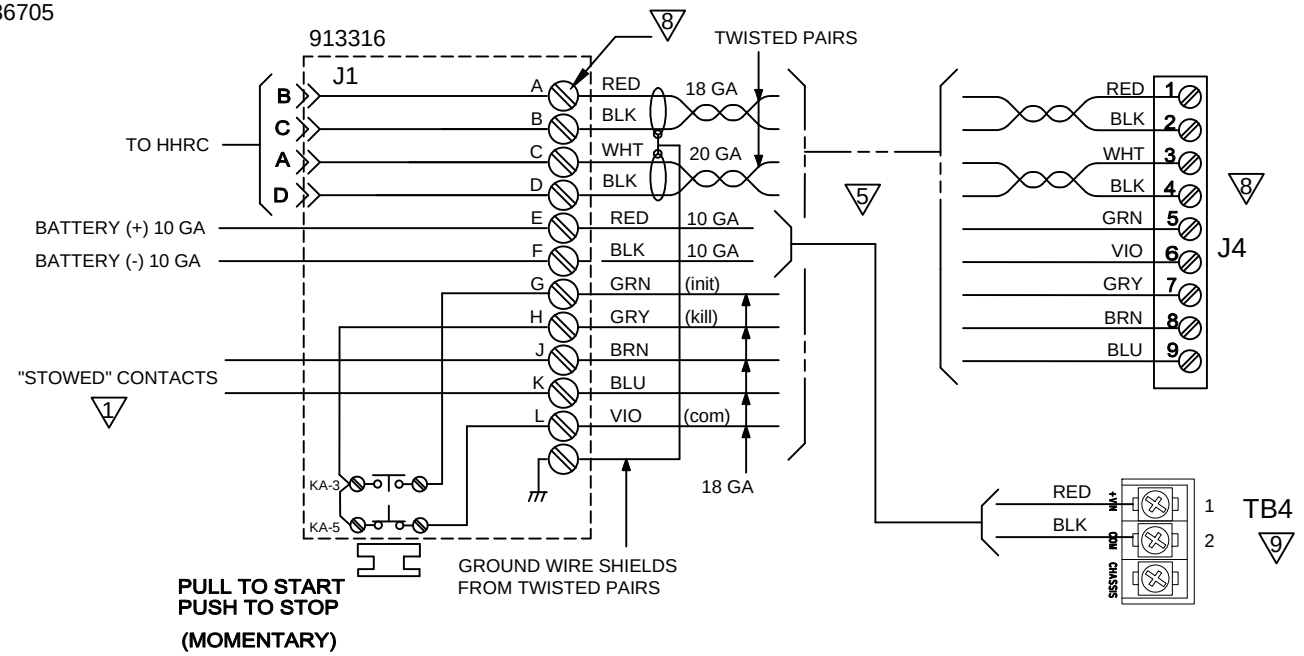

NOTES

1. USE SW2 POSITION 1 ON BASE BOARD TO SELECT OPEN OR CLOSED WHEN NESTED.
   (SOFTWARE 6.3 AND HIGHER)
   SW2-1 OPEN = CONTACTS CLOSED WHEN NESTED
   SW2-1 CLOSED = CONTACTS OPEN WHEN NESTED.
   2 AMPS MAX CURRENT, 20 GA. MINIMUM CONDUCTOR.
2. SW2 POSITION 2 ON BASE BOARD MUST BE OPEN (NFPA MODE)
3. SW2 POSITION 2 ON BASE BOARD MUST BE CLOSED (STANDARD MODE)
4. REMOVE JUMPER(S) IF REPLACED BY PARKING BRAKE INTERLOCK. G-H CLOSED WHEN BRAKE "ON".
   AVAILABLE IN STANDARD MODE ONLY.
5. VERTICAL: 4032502 (30 FT. CABLE), 4032503 (50 FT. CABLE)
   ROOF-MOUNT: 4032505 (30 FT. CABLE), 4032506 (50 FT. CABLE)
6. 4032101 (20 FT. CABLE), 4032102 (50 FT. CABLE)
7. OPTIONAL DISABLE INPUT, CUSTOMER SUPPLIED CONTACTS. MUST HAVE CONTINUITY TO FUNCTION. WILL NOT ALLOW OPERATION IF OPEN, ACTS AS EMERGENCY STOP.
8. 4.4in-lbs, 0.5Nm
9. 20 in-lbs, 2.3Nm

AutoCAD Drawing:
NS J-Box Wiring.DWG

FINISH

UNLESS OTHERWISE SPECIFIED DIMENSIONS ARE IN INCHES

TOLERANCES ON:
DECIMALS ANGLES
0 = ± ± 1/2°
00 = ±
000 = ±

FRACTIONS ±

BREAK ALL SHARP CORNERS

125/ ON ALL MACHINED SURFACES

THIS DOCUMENT CONTAINS PROPRIETARY INFORMATION AND SHALL NOT BE USED OR REPRODUCED OR ITS CONTENTS DISCLOSED IN WHOLE OR IN PART, WITHOUT THE PRIOR WRITTEN CONSENT OF THE WILL-BURT COMPANY.

FOR LOGISTICAL SUPPORT ONLY

SIGNATURE		DATE
DR.BY	DJB	-
CK.BY	JDN	-
APP.BY		

WILL-BURT
AN EMPLOYEE OWNED COMPANY
ORRVILLE,OHIO

NEXT ASS'Y

DESC.
NIGHTSCAN CHIEF ROOF-MOUNT NFPA SINGLE HARD-WIRED J-BOX

SIZE B | DWG. No. WD-72002

SCALE NTS | SHEET 1 OF 1