WILL-BURT

STILETTO™

Stiletto Operating Instructions

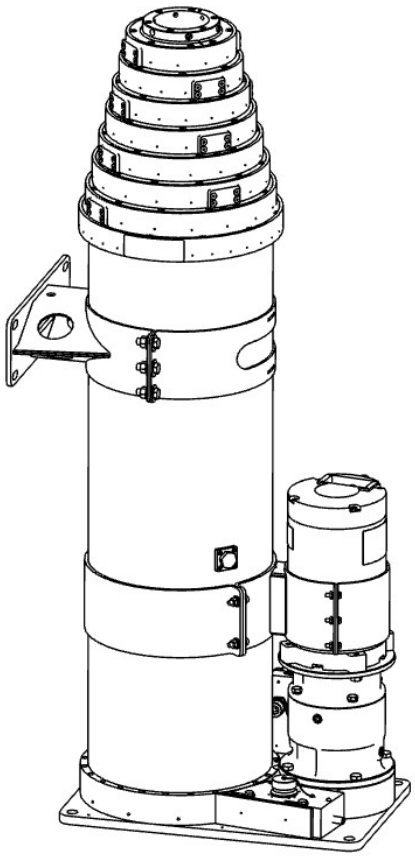

6-Meter Stiletto
P/N: 711290670 Shown

The Will-Burt Company
401 Collins Blvd
Orrville, OH 44667, USA

Phone: +1 330 684 4000
E-Mail: info@willburt.com
Website: www.willburt.com

4259801 Rev. 27, October 2026
© 2026 The Will-Burt Company
Original Instructions

CE UKCA

Authorized Representative:
Will-Burt Germany GmbH & Co. KG
Fischergasse 25
D-91344 Waischenfeld, Germany

INNOVATION ELEVATED®

Warranty

Will-Burt warrants its Stiletto to be free from defects in material and workmanship for a period of two (2) years, with such time period running from the date of shipment by Will-Burt. Will-Burt shall not be responsible for any damage resulting to or caused by its products by reason of failure to properly install, maintain or store the product; use of the product in a manner inconsistent with its design; unauthorized service, alteration of products, neglect, abuse, accident, or acts of God. This warranty does not extend to any component parts not manufactured by Will-Burt; provided, however, Will-Burt's warranty herein shall not limit any warranties by manufacturers of component parts which extend to the buyer.

THE FOREGOING WARRANTY IS IN LIEU OF ALL OTHER WARRANTIES, AND NO REPRESENTATIONS, GUARANTEES OR WARRANTIES, EXPRESS OR IMPLIED, INCLUDING BUT NOT LIMITED TO, A WARRANTY OF MERCHANTABILITY, FITNESS FOR A PARTICULAR PURPOSE, OR NONINFRINGEMENT ARE MADE BY WILL-BURT IN CONNECTION WITH THE MANUFACTURE OR SALE OF ITS PRODUCTS. NO EMPLOYEE, DISTRIBUTOR, OR REPRESENTATIVE IS AUTHORIZED TO CHANGE THIS WARRANTY IN ANY WAY OR GRANT ANY OTHER WARRANTY ON BEHALF OF WILL-BURT.

Claims for defects in material and workmanship shall be made in writing to Will-Burt within thirty (30) days of the discovery of defect. Failure to provide notice as required hereby shall be conclusive evidence that the product was in conformity with the warranty, and Will-Burt shall be released from any and all liability relating to the product. Will-Burt may either send a service representative or have the product returned to its factory at Buyer's expense for inspection. If judged by Will-Burt to be defective in material or workmanship, the product will be replaced or repaired at the option of Will-Burt, free from all charges except authorized transportation.

THE REMEDIES OF BUYER SET FORTH HEREIN ARE EXCLUSIVE AND ARE IN LIEU OF ALL OTHER REMEDIES. THE LIABILITY OF WILL-BURT WHETHER IN CONTRACT, TORT, UNDER ANY WARRANTY, OR OTHERWISE, SHALL NOT EXTEND BEYOND ITS OBLIGATION TO REPAIR OR REPLACE, AT ITS OPTION, ANY PRODUCT OR PART FOUND BY WILL-BURT TO BE DEFECTIVE IN MATERIAL OR WORKMANSHIP. WILL-BURT SHALL NOT BE LIABLE FOR COST OF INSTALLATION AND/OR REMOVAL, OR BE RESPONSIBLE FOR DIRECT, INDIRECT, SPECIAL OR CONSEQUENTIAL DAMAGES OF ANY NATURE.

Document History

Table 0-1 Document History

Document Revision	Date	Change Details
4259801 Revision 21	August 2017	Minor updates to various sections.
4259801 Revision 22	March 2021	Document updated to latest format and content. Updated views shown in some figures to latest. Add EMI Filter for CE. Updated contact information and CE.
4259801 Revision 23	May 2023	Updated Warranty.
4259801 Revision 24	June 2024	Updated P/Ns.
4259801 Revision 25	April 2025	Updated to current FM format.
4259801 Revision 26	June 2025	Updated control box features: include blackout mode feature with SCRAM, can only use the Override Switch to retract the mast.
4259801 Revision 27	October 2026	Updated Additional Accesory Options table, extension times, gear box info, and images.

Contents

1 Safety Summary 5
1.1 Signal Word Definitions 5
1.2 Safety Instructions 5
1.3 Symbols Used on Product Labels 14
2 Specification Compliance 15
2.1 CE Declaration of Conformity 15
2.2 UKCA Declaration of Conformity 15
3 Introduction 17
3.1 Intended Use 18
3.2 Definitions of Terms 18
3.3 Finishes 18
3.4 Mast Component Descriptions 19
3.5 System Controllers 25
3.5.1 **Control Box (P/N: 4600201) 25**
3.5.1.1 *Display* *27*
3.5.1.2 UP/DOWN *Switch* *28*
3.5.1.3 OVERRIDE *Switch* *28*
3.5.1.4 *Bulkhead Connectors* *29*
3.5.1.5 Printed Circuit Board 29
3.5.2 PC Interface 30
3.5.3 Accessory Options (Sold Separately) 31
3.5.3.1 Hand-Held Remote Control 31
3.5.3.2 D-TEC® 32
3.5.3.3 Additional Accessory Options 34
4 Technical Data 35
5 Installation 39
5.1 Pre-Installation Check 39
5.2 Recommended Installation Tools 40
5.3 Installation Hardware 40
5.4 Installation Dimensions 42
5.4.1 Mast Installation Dimensions 42
5.4.2 Support Bracket Assembly Dimensions 44
5.4.3 Control Box Dimensions 45
5.4.4 EMI Filter Dimensions (Optional) 47
5.5 Power Supply Requirements 47
5.6 Mast System Installation 48
5.6.1 Mounting Location Requirements 48
5.6.2 Unpacking & Handling 49
5.6.3 Secure the Support Bracket Assembly 51
5.6.4 Secure the Base of the Mast 51
5.6.5 Finalize Physical Installation of the Mast 52
5.6.6 Secure the Control Box 53
5.6.7 Electrically Install the Mast System 54
5.6.8 Connect Power to the Mast System 56
5.7 Additional Accessory Installation 58
5.8 Test the Installation 58
5.9 Install Payload 59

6 Operation 61
6.1 Pre-Operation Check 61
6.2 Operation Equipment 62
6.3 Controls 62
6.3.1 Control Box (Powered Operation) 62
6.3.2 PC Interface (Powered Operation) 63
6.3.3 Crank Handle Assembly (Manual Operation) 63
6.4 Control Box Operation 64
6.4.1 Prepare the System for Powered Operation 64
6.4.2 Extend the Mast with UP/DOWN Switch 65
6.4.3 Retract the Mast with UP/DOWN Switch 66
6.4.4 Retract the Mast with OVERRIDE Switch (Emergency Operation) 67
6.4.5 Access the Cycle Count and Temperature with UP/DOWN Switch 68
6.5 PC Interface Operation 68
6.6 Crank Handle Operation 68
6.6.1 Prepare the System for Manual Operation 69
6.6.2 Extend and Retract the Mast with Crank Handle Assembly 69
6.7 Special Instructions for Clearing Heavy Ice Buildup 71
7 Transportation 75
7.1 General Transportation 75
7.2 Shipping 76
8 Maintenance 77
8.1 Pre-Maintenance Check 77
8.2 Maintenance Equipment 77
8.3 Spare Parts 78
8.4 Preventative Maintenance Checks and Services (PMCS) 78
8.4.1 Schedule 78
8.4.2 Lubricate the Drive Screw 80
8.4.3 Corrosive Environments 81
8.4.4 Mast Damage 82
8.5 Long-Term Storage 83
8.6 System Disposal 83
9 Troubleshooting 85
9.1 Error Conditions 85
9.2 Error (Fault) and Warning Codes 88
9.2.1 Error (Fault) Codes 89
9.2.2 Warning Codes 94
10 Reference 99
10.1 Extended Glossary of Terms 99
10.1.1 General Terms and Abbreviations 99
10.1.2 Mounting Position Terms 100
10.2 Guying 101
10.3 Drawings 102

1 Safety Summary

This section describes safety instructions for the Stiletto that personnel must understand and apply throughout all product activities such as transportation, handling, installation, operation, maintenance, storage, disposal and troubleshooting. Read and understand this entire document, and contact The Will-Burt Company with any questions, before performing any procedure outlined in this document. Keep this document during the entire duration of use of the device. Pass this document along to trained and qualified end users.

1.1 Signal Word Definitions

The following signal words and definitions are used to indicate hazardous situations:

⚠ DANGER

DANGER indicates an imminently hazardous situation that, if not avoided, will result in death or serious injury.

⚠ WARNING

WARNING indicates a potentially hazardous situation that, if not avoided, could result in death or serious injury.

⚠ CAUTION

CAUTION indicates a potentially hazardous situation that, if not avoided, may result in minor or moderate injury or equipment damage. It is also used to alert against unsafe practices.

1.2 Safety Instructions

⚠ DANGER

Electrocution Hazard! Contact with high voltage will result in death or serious injury. Observe general safety precautions for handling equipment using high voltage. Do not locate or operate mast near electrical lines, cables or other unwanted sources of electricity. Allow sufficient clearance on all sides of mast to allow for side sway. Do not operate mast during an electrical storm. Be certain electrical cables are undamaged and properly terminated. Do not touch live wires. Follow OSHA or other national safety regulations when working near energized power lines. Personnel working with or near high voltages should be familiar with methods of resuscitation.

⚠ DANGER

Disconnect Power for Service! Always disconnect all power sources following proper lock-out tag-out procedures before performing service, repair or test operations. Remove the tethered hand held control where applicable for added protection during maintenance.

⚠ DANGER

Mast Tip Over Hazard! Mast tip over could result in death or serious injury. Before operation, be certain mounting structure is capable of resisting forces generated from all loading and

environmental conditions, including, but not limited to, mast size and weight, payload and cable size and weight, payload sail area, wind speed, guy line arrangement, support bracket or roof line location, and base plate assembly. Do not operate in wind speed conditions exceeding the maximum rated wind speed. Do not operate on slopes exceeding the maximum deployment angle. Do not install a payload that exceeds the maximum payload lifting capacity of mast. Do not install a payload with the center of gravity offset from mast centerline exceeding the maximum allowed offset. Stand clear of mast and mast payload during operation. Be certain mast is level and secure before and during installation, operation, and maintenance.

⚠ DANGER

Falling Objects from Mast Hazard! Wear a protective hard hat when working on mast or situated near mast operating area while mast is extending, retracting or deployed in any position above the nested position. Improperly secured payload or mast components, ice formations, etc. could be dislodged from mast and fall. Be sure the payload is properly installed and secured.

⚠ DANGER

Relocation/Driving Hazard! Do not relocate the system during operation or while mast is extended to any height above the nested position or powered up. Do not move vehicle until mast has been securely nested and isolated from power. Power-up and operate mast only if the vehicle is stationary and securely parked with the parking brake properly applied. Do not put mast in service or operate without the vehicle interlock warning circuit or magnetic warning kit installed to provide confirmation mast is nested prior to moving the vehicle. Contact The Will-Burt Company Engineering team for special on-the-move situations for military only use on specialized products.

⚠ DANGER

Burst Hazard! For pneumatically operated masts, do not operate without the over-pressure safety valve installed. Keep personnel clear of safety valve exhaust direction. Do not exceed the maximum rated pressure of mast. If the mast air pressure is not fully discharged prior to removing air hoses, a rapid release of air pressure will occur requiring hearing and eye protection.

⚠ WARNING

Payload Lifting Hazard - Intended Use! The mast is intended to lift a specific payload for lighting, surveillance or communication use only. Any other use without written consent is prohibited and could cause death or serious injury. Do not use mast to lift personnel. Do not exceed specified payload capacity. Large payload wind sail areas can reduce payload capacity. Consult The Will-Burt Company Engineering team.

⚠ WARNING

Safety Instruction – Lightning! Lightning protection is not part of this system. A proper means of electrical grounding should be provided. Failure to observe this warning could result in death or serious injury.

⚠ WARNING

Read Operating Instructions! Read and observe the operating instructions. Non-observance of the instructions, operation which is not in accordance with use as prescribed in the instructions, wrong installation or incorrect handling can seriously affect the safety of operators and machinery. Adhere to the safety instructions when carrying out any activity relating to the Stiletto.

⚠ WARNING

Trained Personnel Only! This product is intended for use by trained professionals only. It is not intended for general use by the public or untrained personnel. Handling, installation, operation and maintenance to be performed by trained and authorized personnel only. Only a properly trained and qualified certified electrician should perform electric installations and service.

⚠ WARNING

Erratic Mast Operation Impact Hazard! The mast should operate smoothly during extension and retraction. If erratic mast motion is observed during extension or retraction that results in impact loading between the tube and the tube collar (mechanical travel stop), cease use of the mast and contact The Will-Burt Company service department. Repeated operation with impact loading can damage tubes and lead to mast separation.

⚠ WARNING

Over-current Protection! Over-current protection or power switching by the installer on mast incoming power supply as specified in this document should be a type suitable to allow lock-out tag-out procedures for power disconnect.

⚠ WARNING

Safety Instruction - Explosion! For outdoor use only. Do not use in explosive areas or areas that have been classified as hazardous as defined in Article 500 of the National Electric Code or equivalent national standards. Do not use in the presence of flammable gases or liquids such as paint, gasoline or solvents. Do not use in areas of limited ventilation or where high ambient temperatures are present.

⚠ WARNING

Safety Equipment (PPE)! Proper personal protective equipment (PPE) like hard hats, gloves, and safety shoes shall be properly worn while working on mast or near the deployment area of mast. In addition, eye protection shall be worn during maintenance procedures. Follow national PPE guidelines in your area of operation.

⚠ WARNING

Pinch Point Hazard! Keep clear of all moving parts like mast collars nesting. Be sure to stay clear of system during operation. Moving parts can crush and cut resulting in serious injury. The mast shall be mounted out of reach of the operator during operation.

⚠ WARNING

Crush Hazard - Mast Failure! Do not stand directly beneath mast or its payload. Be certain the payload is properly installed and secured.

⚠ WARNING

Entanglement Hazard! Tangled cables can cause equipment damage. Ensure payload cables, Nycoil®, trip lines, guy lines or other cables are not tangled and are free to pay out as mast is deployed. Cables that get tangled or snagged on mast or other objects can cause mast tubes to lurch upward suddenly when the cable is freed. This can cause damage to mast and lead to mast separation if repeatedly allowed to continue.

⚠ WARNING

Health and Safety Hazard while Cleaning! Solvent used to clean parts is potentially dangerous. Avoid inhalation of fumes and prolonged contact to skin.

⚠ WARNING

Fire Hazard Solvent! Cleaning solvent, used for maintenance, is flammable and can be explosive. Do not smoke near solvent. Use cleaning solvent in a well-ventilated area. Keep cleaning solvent away from ignition sources. Always store cleaning solvent in the proper marked container and in a proper location.

⚠ WARNING

Bright Light Radiation Hazard! For systems equipped with scene lighting or look-up lights, do not look directly into lights when they are illuminated. Temporary impairment or permanent vision damage could occur.

⚠ WARNING

Personnel Freezing/Burn Hazard! If the system is equipped with lights, make sure the lights are completely cool before attempting to clean the lens, replace bulbs or perform maintenance. Wear gloves to protect from contact with exposed metal that may be at extremes of hot and cold temperatures from sun or cold outdoor exposure.

⚠ WARNING

Mast Extension Hazard - Obstruction! Extending mast into obstructions could result in death or serious injury and could render mast inoperable and partially extended. Before applying power and operating mast, be certain there is sufficient clearance above and to all sides of the expected location of the fully extended mast and payload. Keep all persons clear of mast and mast extension. Do not lean directly over mast. Locate the operator station such that the operator has a clear view of the operating space of mast and payload prior to deployment to avoid contact with overhead objects.

⚠ WARNING

Manual Retraction! For powered masts, make sure all power sources have been disconnected from the system prior to manually lowering mast to avoid unexpected start-up motion and/or damage to mast.

⚠ WARNING

Mast Lifting/Handling! Use extreme caution while lifting mast system and when mast system is suspended to avoid injury and equipment damage. Be certain mast is properly secured using at least two sling points at the center of gravity label. All operators should be aware of and follow the applicable local, regional, and national standards and codes of practice for slinging and transporting equipment. Never lift Mast System over people. Ensure lifting equipment including, but not limited to, lifting straps and hoist, are capable of handling the forces generated from lifting the system. Observe manufacturer instructions on lifting equipment.

⚠ WARNING

Remove Payload! For mast systems shipped with no payload (customer installed payloads), remove payload before performing maintenance on mast system. The Will-Burt Company installed devices can remain installed.

⚠ WARNING

Equipment Damage - Submerged! Do not submerge mast in liquid or operate the vehicle in a fording situation that would result in a submerged mast.

⚠ WARNING

Safety Instruction – Keep Clear! Keep personnel clear of the system during operation.

⚠ WARNING

Safety Instruction - Potential Air Contaminants! If internally mounted in a vehicle, air from mast and any accumulated water will discharge into the vehicle. Install appropriate drainage and venting.

⚠ WARNING

Fastener Vibration Hazard! Mast system and payload mounting hardware must include proper means to resist vibration loosening such as thread-locking compound, locking hardware, or equivalent. Use specified assembly torques appropriate for the fastener size.

⚠ CAUTION

Frozen Water Hazard! Water freezing inside mast or air fittings may render mast inoperable and cause major equipment damage such as tube deformation. Ensure water is free to exit at the base of mast. Open drain cock when mast is not in operation. The drain cock shall be installed at the lowest position in the pneumatic system. If mounted internally in a vehicle or structure, direct the draining water to a suitable location. Cover locking masts when not in use to limit water ingress. Non-locking masts stored outdoors should be covered if possible. A cover is available from The Will-Burt Company.

⚠ CAUTION

Safety Instruction - Guy Anchors! For masts using Guy Lines, verify the Guy Anchor point strength is adequate to support the Guy Line forces.

⚠ CAUTION

Lubrication! Do not lubricate the exterior of mast moving tubes. The lubricant will attract dust and other environmental contaminants into mast.

⚠ CAUTION

Equipment Damage - Forces! Before unloading the system, be certain the unloading region is capable of resisting forces generated from unloading the system including but not limited to system weight. Ensure the unloading region is level and has sufficient room and strength to hold the system. If the unloading region is incapable of meeting the requirements of the system, damage to the system and/or unloading region could occur.

⚠ CAUTION

Equipment Damage - Support Bracket! For masts using an upper support bracket, do not over-tighten mast support bracket. Over-tightening may damage the Base Tube causing mast tubes to stick.

⚠ CAUTION

Mast and Payload Access! The operator must provide safe means to access mast and payload during installation, removal and maintenance.

⚠ CAUTION

Tripping Hazard! Cables, trip lines, guy lines and guy anchors can be hard to see during and after installation. Any equipment posing trip hazards should be clearly marked.

⚠ DANGER

Equipment Damage! At survival wind speed or contacting an obstruction, an extended mast can generate:

- **Stiletto and Stiletto HD masts:** 83,333 lb.-ft. (1,000,000 lb.-in. or 113,000 N-m) of overturning moment at the base before breaking mast.
- **Stiletto AL masts:** 22,500 lb.-ft. (270,000 lb.-in. or 30,506 N-m) at the base.
- **Stiletto AL HD masts:** 20,000 lb.-ft. (240,000 lb.-in. or 27,116 N-m) at the base.

The mounting structure must be designed accordingly.

⚠ WARNING

Tip Over Hazard! Before operating, the base section shall be within:

- 10° of vertical for models at or below 10M extended height
- 5° of vertical for models above 10M extended height

⚠ WARNING

Mounting Structure Hazard! Before installation, ensure the mounting structure is capable of resisting forces generated from all loading and environmental conditions, including, but not limited to, Mast System size and weight, payload size and weight, vehicle dynamic loads, sail size, wind speed, support bracket or roof line location and base plate assembly. The lower structure at the base plate shall be sized to support all vertical loads from mast and payload. The support bracket is not intended to carry vertical loads. The support bracket mounting structure and the base plate mounting structure shall be tied to the same vehicle structure/frame (i.e. do not mount the support bracket to vehicle body and the base plate to the vehicle chassis frame. This would put the vehicle suspension system between the mounting points).

⚠ WARNING

Mast Extension Hazard! Check for and remove any objects that might obstruct motion, cause binding, or hinder function of the system.

⚠ WARNING

Payload Mounting! Bolt the payload to the mast using all six of the provided mounting holes using proper thread locking techniques such as lock washers and locking compound.

⚠ WARNING

Disconnect Power! Power must be disconnected before connecting or disconnecting any Mast System connector. For example, power must be disconnected when connecting or disconnecting J1, J2, J3, and J4 on the Control Box (the Stiletto AL HD mast requires power be disconnected when connecting or disconnecting J1, J2, J3, J4, and J5 on the Control Box). Do not disconnect the power cable from J1 on the Control Box, mast or from the power source while mast is in motion (extending or retracting). This could result in damage to the Control Box.

⚠ WARNING

Relocation Hazard - Payload! This applies especially to vehicle-mounted masts. The payload must be supported or removed prior to driving the vehicle to prevent damage to the mast and payload. Remove any payload tie down or locking features before operating the mast. Do not move the mast while it is being raised or lowered.

⚠ WARNING

Pinch Point Hazard! Do not operate mast without the protective dust cover over the manual override drive socket installed. Rotating parts can crush and cut resulting in death or serious injury. Keep clear of moving parts while operating mast.

⚠ WARNING

Safety Instruction – Remote Control! The equipment is subject to remote control and may be operated at any time. Persons working on the equipment should take appropriate precautions to ensure that any unexpected movement does not occur as this could lead to injury.

⚠ WARNING

Lock Mechanism - Does Not Apply to Stiletto AL HD Mast! Do not modify mast lock mechanism or lock housing or attach any components to the lock housing. Do not remove the locks with mast extended. Equipment damage and dangerous mast collapse could occur if the lock mechanism is modified. Do not let the payload control/power cables get between the lock housing and the lock post during retraction. Pinching the cable with the lock during nesting can result in an unsafe operating condition or damaged to cables.

⚠ WARNING

Slip Clutch - Stiletto Mast Only! This Stiletto mast is supplied with a friction slip clutch to prevent serious damage to the mast in the event of a jam. There is no way to detect the action of the slip clutch other than operator observation. When the clutch begins to slip, that is, when the motor is running and the mast is neither extending nor retracting, release the extend/retract toggle switch immediately to avoid overheating the clutch.

⚠ WARNING

Kinetic Energy - Stiletto HD Mast Only! For the Stiletto HD mast, the fail-safe, normally engaged when power is removed, brake attached to the top end of the motor can be manually disengaged. Verify the state of the brake. Confirm that the brake is engaged if you are relying on it to control back-driving of mast. The brake should only be disengaged during controlled manual

operation. Potentially destructive kinetic energy may be created while operating manually. You must use the hand crank not only to move the mast, but also to keep the mast from moving on its own due to gravity. Wear hard hat and gloves when operating the mast manually.

⚠ WARNING

Kinetic Energy - Stiletto AL and Stiletto AL HD Masts Only! For the Stiletto AL and Stiletto AL HD masts, the mast has an automatic fail-safe brake. No manual intervention is required during manual operation. In the unlikely event of brake failure the mast can back-drive. Potentially destructive kinetic energy may be created.

⚠ CAUTION

Equipment Damage - Cable Routing! Cabling or Nycoil should be routed such that it cannot become trapped or pinched between mast collars or speared by the trigger posts during retraction. This can interfere with the lock mechanism functionality.

⚠ CAUTION

Equipment Damage - Cutting! Wear gloves when installing the electrical ground strap and handling icebreakers to avoid possible injury.

⚠ CAUTION

Voltage and Current! Verify that a power source capable of delivering the specified mast system voltage and current has been properly connected to the Control Box. Damage to the Control Box may occur if voltage drops below 18 volts during operation of the mast. Verify the power supply has been connected with the right polarity before initializing the mast system.

⚠ CAUTION

Equipment Damage - Overriding Sensor and Faults! Only use OVERRIDE switch for emergency operation of mast. When the OVERRIDE switch is engaged, all sensors and faults generated by the controls of the mast are ignored. Power to the Motor will continue as long as the OVERRIDE switch is held, even at the extreme high and low ends of travel. The limit switches typically used to prevent the mast from over-traveling at the extreme ends of travel will not function normally. Use extreme caution when using the OVERRIDE switch at the fully extended and fully nested areas of mast deployment. Holding the UP/DOWN switch beyond the limits of travel may result in equipment damage.

⚠ CAUTION

Equipment Damage - Manual Operation! When manually extending or retracting the mast, do not drive past the normal extended or nested stops. Do not apply in excess of 50 lb.-ft. (68 N-m) when using the Crank Handle Assembly. The normal protections are being bypassed and equipment damage could occur. Use caution to avoid strain when operating the hand crank.

⚠ CAUTION

Screw Lubrication Equipment Damage! Do not substitute any grease for the Will-Burt drive screw lubricant. This is a super-premium aerospace grade product and is required for specified performance and life.

⚠ CAUTION

Equipment Damage – Control Box! Do not open the Control Box. The Control Box is vacuum-sealed at the factory. Opening the Control Box could cause equipment damage and will void the warranty.

⚠ CAUTION

Safety Instruction – Roof Access! If mast will be mounted to a vehicle, the operator must provide safe means to access the roof of the vehicle during installation and maintenance.

⚠ CAUTION

Lifting Hazard – Manually Lifting! Manually lifting over 55 lb. (25 kg) is prohibited. In the UK, all lifting equipment must be thoroughly examined annually by a competent person according to the Lifting Operations and Lift Equipment Regulations 1998. Equivalent regulations exist in other EU states.

⚠ CAUTION

Equipment Damage – Qualified Personnel! All persons installing and maintaining this equipment should be suitably qualified and work to local, regional, and national standards and codes of practice.

⚠ CAUTION

Safety Instruction - Polarity! Reversing polarity of the source incoming DC power will damage components.

⚠ WARNING

Sensors! Keep magnets and magnetic fields away from the mast and junction box. Failure to do so can result in sensor and mast malfunctions.

The following list contains reasonably foreseeable misuses of the mast system according to EN ISO 12100 5.3.2. These uses shall be avoided:

- Operating the mast with an obstruction in the functional space that prevents full extension or retraction
- Operating the mast near overhead power lines
- Operating the mast without the mast and operating space visible to the operator
- Driving the vehicle with the mast in a deployed position (any height above the nested position) or powered-up or without opening venting the mast to atmosphere
- Operating the mast or leaving deployed in wind speeds higher than the specified maximum velocity
- Operating the mast on a non-level surface greater than the specified maximum angle
- Installing a payload greater than the maximum rated payload (weight and sail area) of the mast

1.3 Symbols Used on Product Labels

The following symbols are displayed on the product. The symbol meanings are as follows:



This symbol indicates an electrocution hazard or hazardous voltage hazard. There is voltage present inside mast and control box. Do not operate mast near electrical lines or during electrical storms. Contact with high voltage will result in death or serious injury.



This symbol indicates a pinch point hazard. Keep fingers and hands clear of moving parts.



This symbol indicates a tip-over hazard. The mast must be properly supported during transport, handling, installation, maintenance, operation and decommissioning. System tip-over could result in death or serious injury.



This symbol indicates a general warning. In this unit, this symbol indicates a frozen water hazard. Water must be permitted to exit mast to avoid ice damage to mast.



This symbol is used to remind users to read and understand the operator's manual before operating the mast system. Failure to follow operating instructions could result in death or serious injury. Read and understand operating instructions before handling, installing, operating, or maintaining the mast system.



This symbol indicates a hard hat is required when working under the mast operating area. Failure to wear a hard hat could result in death or serious injury.



This symbol indicates an electrical ground connection point.



This symbol is used to indicate the center of gravity (COG) of a fully nested mast in a horizontal transport position.

2 Specification Compliance

2.1 CE Declaration of Conformity

Refer to the Product page at www.willburt.com for the latest Declaration of Conformity.

2.2 UKCA Declaration of Conformity

Refer to the Product page at www.willburt.com for the latest Declaration of Conformity.

This page intentionally left blank.

3 Introduction

Thank you for selecting The Will-Burt Company for your critical payload elevation needs. These operating instructions describe transporting, handling, installing, operating, maintaining, storing, and troubleshooting procedures for the Stiletto. These procedures assume the use of standard mast systems. Procedures and characteristics for mast systems customized to meet customer-specific needs may vary.

These operating instructions are intended for professionals who are qualified by their appropriate training and experience to perform the procedures. Review this document in its entirety. Contact The Will-Burt Company with any questions before performing any procedure outlined in this manual.

The views depicted in this manual are provided for clarification and are subject to change without notice. Views are not to scale.

The following models are covered in these operating instructions:

- 3-Meter Stiletto
- 4-Meter Stiletto
- 6-Meter Stiletto
- 10-Meter Stiletto
- 15-Meter Stiletto

This manual is not for the following masts:

- Stiletto AL models
- Stiletto AL HD models
- Stiletto HD models

See www.willburt.com for information on these and other The Will-Burt Company products.

A typical Stiletto mast system consists of:

- A telescoping mast with a 28 VDC Drive Assembly and a Support Bracket Assembly
- Control Box
- Optional Accessories

3.1 Intended Use

The Stiletto mast system is intended to be installed and operated by trained professionals to elevate critical payloads. It is not intended for use by non-professionals. The Stiletto mast is designed to lift a specific payload for lighting, surveillance, or communication use only. Do not use the mast to lift personnel. The mast is intended for stationary use. Contact The Will-Burt Company with any questions on the intended use, special on-the-move use for military applications only, or available training programs for installation and operation.

3.2 Definitions of Terms

Throughout this manual, the following terms are used:

- **Mast:** refers to the mechanical telescoping mast
- **Mast System:** refers to the entire Stiletto mast system (telescoping mast, Control System, and additional accessories)
- **Payload:** refers to the object or equipment being raised by the mast to an operational height

See Section 10.1 for an Extended Glossary of Terms used within this manual. The Extended Glossary of Terms includes:

- General Terms and Abbreviations (Section 10.1.1)
- Mounting Position Terms (Section 10.1.2)

3.3 Finishes

The Will-Burt Company offers a variety of mast finishes designed to prolong the life of the mast and reduce maintenance. The Drive Assembly, the base tube, and intermediate tubes will be painted the appropriate color. CARC finish is available.

For information on available mast finishes, see www.willburt.com.

3.4 Mast Component Descriptions

Telescoping Mast: The mast is the structure used to raise the payload to an operational height. It consists of concentric, nesting mast tubes that extend and retract electro-mechanically. The mast is self-locking. The exterior surfaces of the tubes are anodized and sealed for long life.

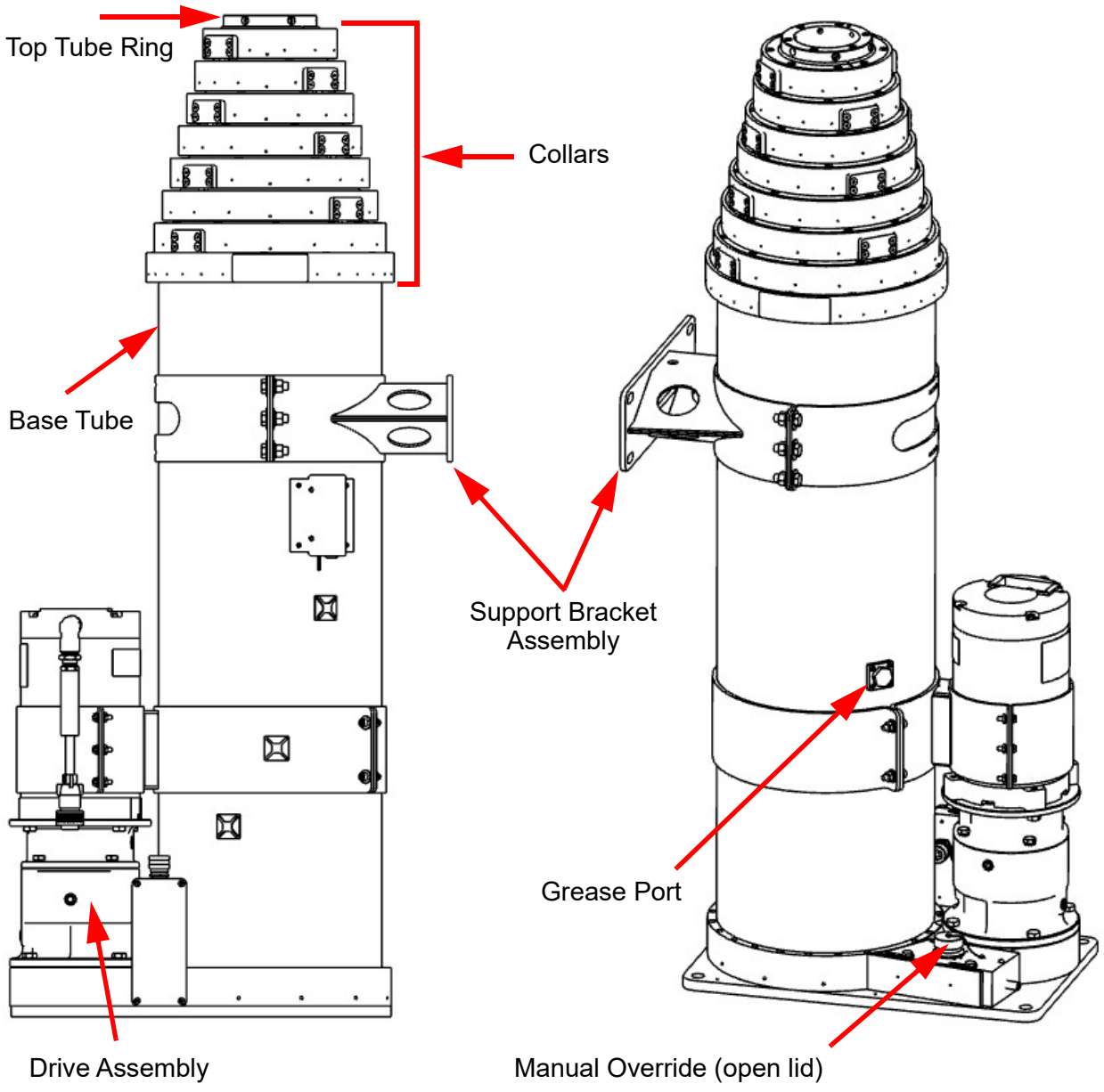

Figure 3-1 Mast (6-Meter Stiletto P/N: 711290670 Shown)

Drive Assembly: The drive assembly extends and retracts the mast tubes. It includes a drive screw, motor and mast drive housing.

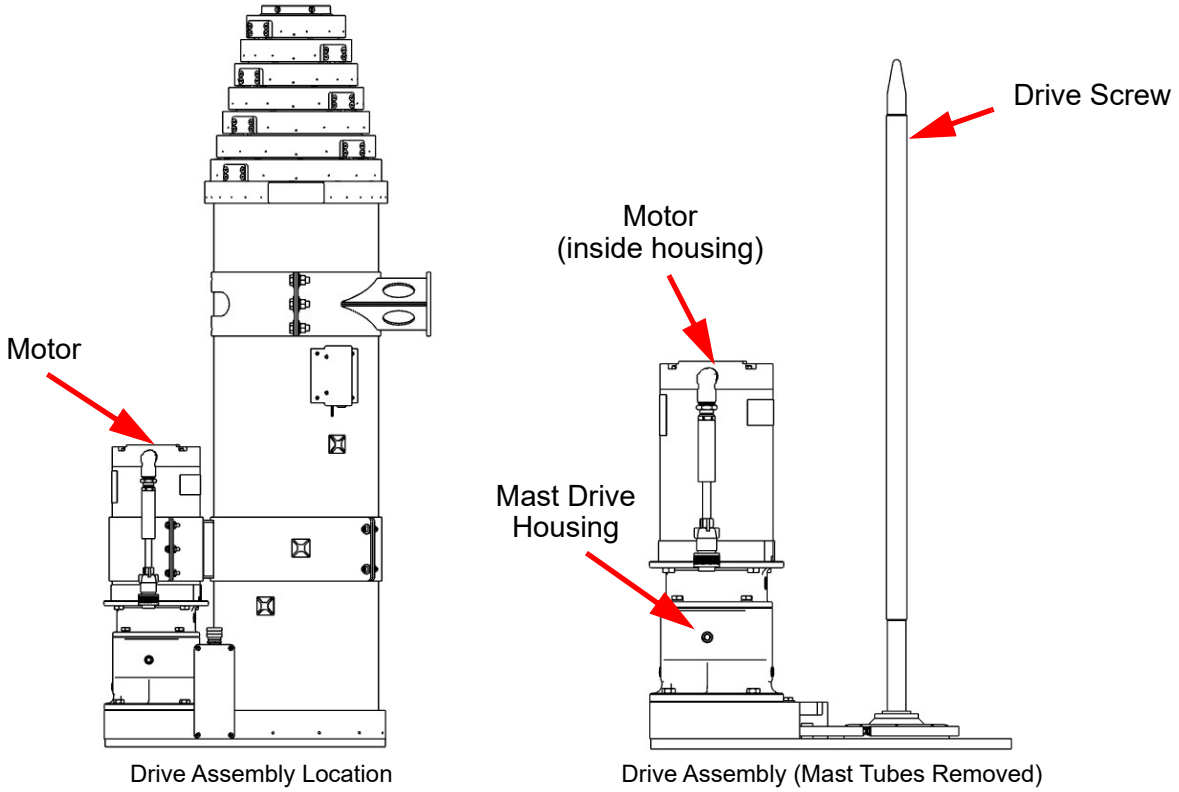

Figure 3-2 Drive Assembly (Not to Scale)

Drive Screw: The mast is driven by a stainless steel, electro-mechanical drive screw. Each moving tube (all except the base tube) has an extension nut attached to its bottom which rotates on the drive screw. The drive screw extends and retracts the tubes as it rotates. The drive screw is located in the center of the mast and responds to either input from the Control Box or by manually cranking the motor (with all power disconnected).

Motor: The motor is used, in powered operation, to rotate the drive screw. Friction in the drive system keeps the payload supported when the motor is not energized.

Collars: Collars are fitted to the top end of each tube except the top tube which has a top tube ring (Figure 3-4). The collars have automatic locks and integrated icebreakers. Do not attach any devices, remove the screws on the locks, or alter the locks in any way.



Figure 3-3 Collars (4-Meter Stiletto P/N: 711290461 Shown)

Top Tube Ring: The top tube ring is attached to the top tube and provides the payload mounting point. The top tube ring below is applicable to masts with a top tube outer diameter of 110 mm (4.31 inches). See mast drawings for the top tube ring dimensions for other top tube diameters.

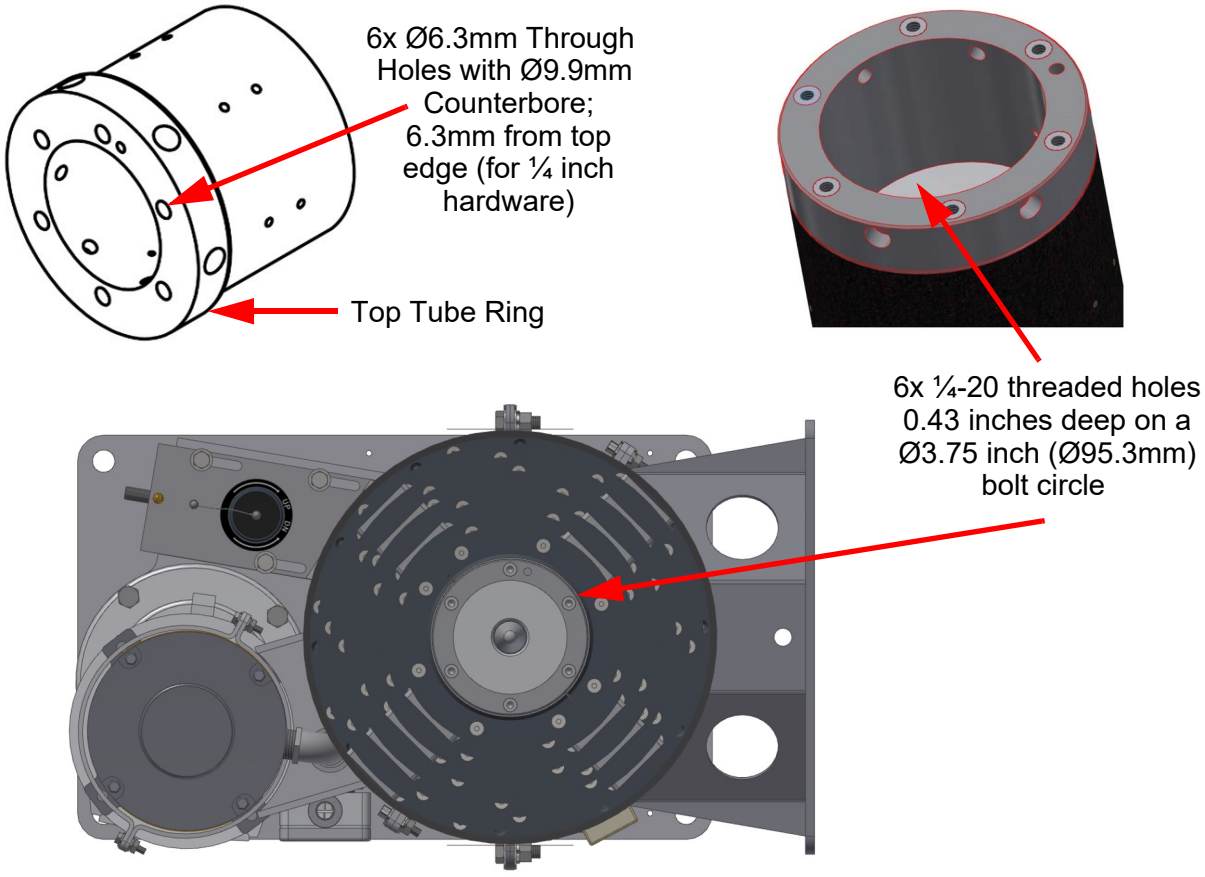

Figure 3-4 Top Tube Ring (4-Meter Stiletto P/N: 711290461 Shown)

Support Bracket Assembly: The support bracket assembly secures the mast to the support structure. Along with the mounting holes in the base of the mast, it is an essential part of mounting the mast system. Hardware to secure the support bracket assembly to the mast ships with the mast system. Hardware to secure the support bracket assembly to the support structure varies based on the customer-specific mounting application and is customer-provided.

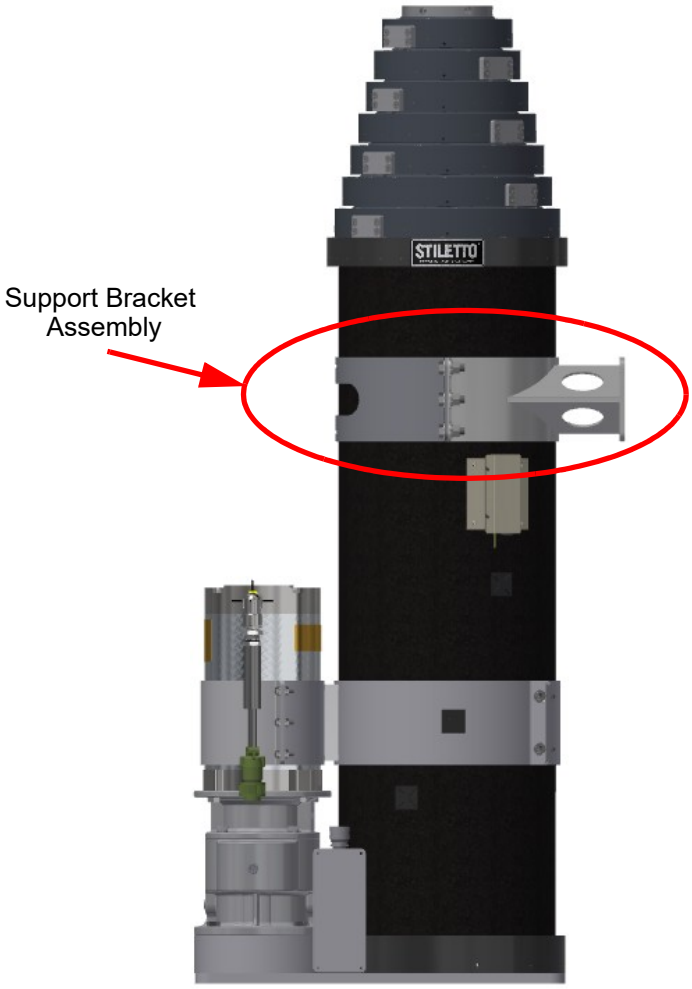

Figure 3-5 Support Bracket Assembly (Not to Scale) (6-Meter Stiletto P/N: 711290670 Shown)

EMI Filter (for CE): The EMI Filter includes a shielded cable (multiple lengths available) to the Control Box J1 connector. It mates with customer supplied shielded cable to power supply and customer control. It is required for CE EMC/EMI compliance. It is ordered separately from the mast assembly.

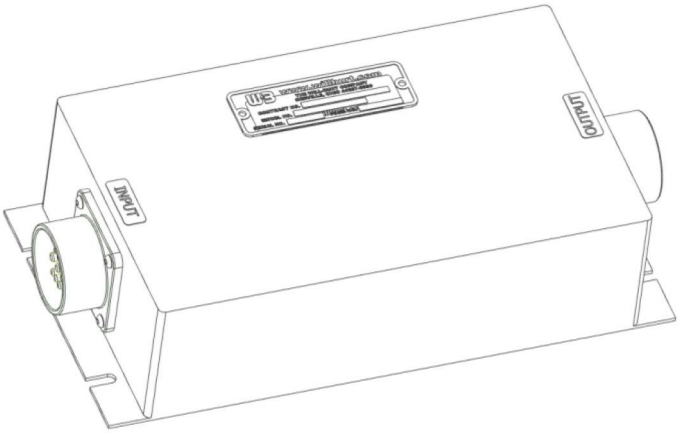

Figure 3-6 EMI Filter (for CE)

Power Cable Connector: The power cable connector is a MS3106E24-11S Connector that connects the customer-supplied power cable to the Control Box at J1 (or on the EMI Filter input side as required). It ships with the mast system.



Figure 3-7 Power Cable Connector

Identification Plate: Information pertaining to the mast can be found on the identification plates. The identification plates are located on the mast drive housing and on the side of the Control Box. The information on the identification plates is the same.



Figure 3-8 Identification Plate (P/N: 4518302 Shown)

Crank Handle Assembly: The crank handle assembly can be used to manually crank the motor to extend and retract the mast. It ships with the mast. When manually cranking the motor, it is necessary to remove all power from the mast system.



Figure 3-9 Crank Handle Assembly

Grease Gun: The Grease Gun is used to lubricate the Drive Screw with a super-premium aerospace lubricant which is available from The Will-Burt Company in three fluid ounce cartridges.

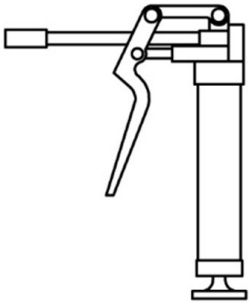

Figure 3-10 Grease Gun

Label Kit: The label kit is used to identify potential hazards and connection points within the mast system. These labels come installed on the mast system. Additionally, the label kit includes ground straps and hardware used to ground the mast system and control box. Contact The Will-Burt Company for information pertaining to alternate language label kits.

3.5 System Controllers

3.5.1 Control Box (P/N: 4600201)

This section describes the standard Control Box. Additional options are available. Contact The Will-Burt Company for additional information.

The standard Control Box (Figure 3-11):

- Combines customer input, power input, sensor input, and power output to allow the customer to extend and retract the mast without running past sensor or software limits.
- Contains power MOSFETs to control Motor direction and to dynamically brake the Motor. When a directional command is terminated, the Control Box automatically shorts the Motor leads for a second or two to dynamically brake the motor.
- Can be factory-set to show the intermediate extension height in metric or US customary units.
- Is wired to allow for an optional Hand-Held Remote Control or PC Interface.
- Has some self-diagnosis capability (errors and warnings).
- Is housed in an aluminum NEMA 4X box.
- Is vacuum-sealed at the factory. Opening the Control Box will void the warranty.

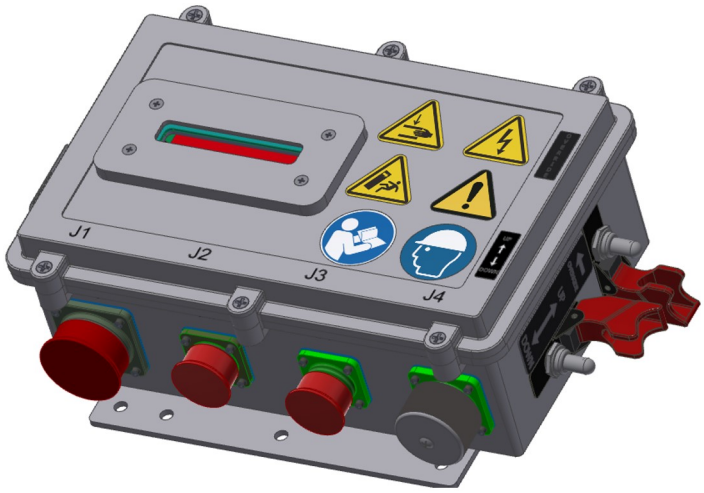

Figure 3-11 Control Box

The Control Box works with input from the:

- **Nested Limit Switch:**
  - Prevents mast from being over-nested
  - Is installed in the mast
  - Is an electronic switch triggered by a probe attached to the bottom of the center tube
- **Fully Extended Limit Switch:**
  - Prevents the mast from being overextended
  - Is a reed switch mounted on the base tube that detects a permanent magnet attached to the bottom of the largest moving tube
- **Proximity Sensor:**
  - Counts the teeth on a sprocket attached to the drive screw
  - Interprets this data as an extension distance to generate the intermediate extension height

Components of the Control Box (Figure 3-12) include:

- Display
- UP/DOWN Switch with Waterproof Boot
- OVERRIDE Switch with Waterproof Boot
- Bulkhead Connectors (J1, J2, J3, and J4)
- Printed Circuit Board (Not shown)

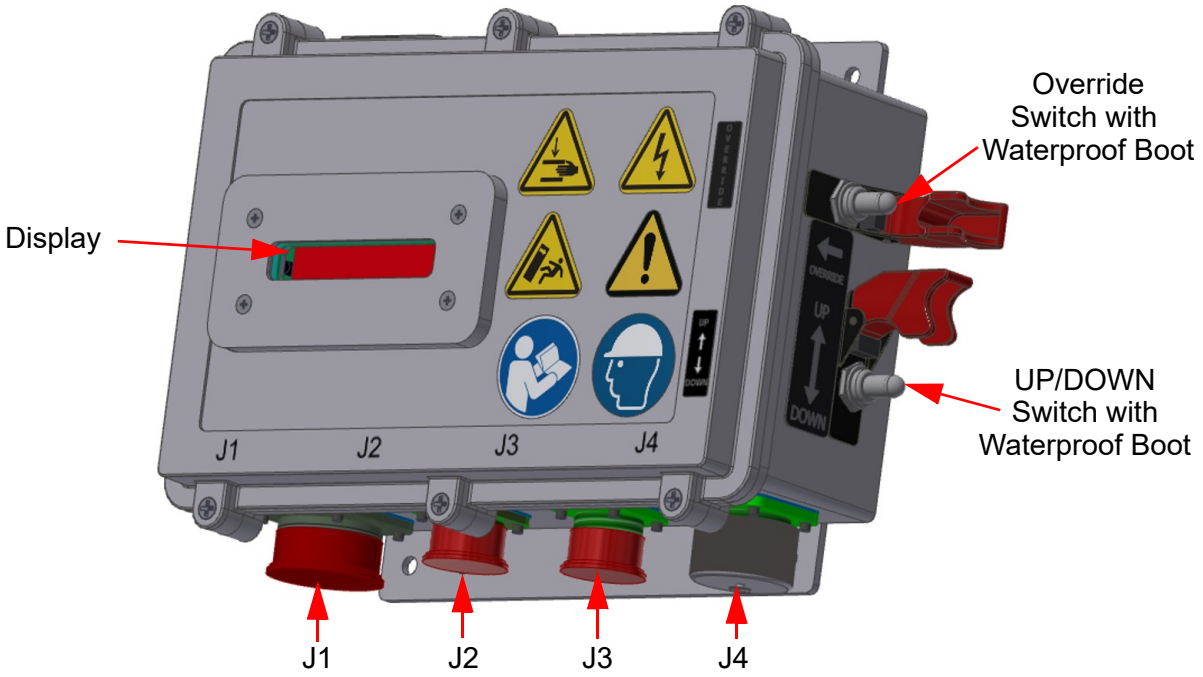

Figure 3-12 Control Box Components

3.5.1.1 Display

The Control Box has an eight-digit, infrared secure, green LED alphanumeric display.

The display shows the:

- Mast Status and software version
- Cycle Count of the Mast
- Error Codes

Mast Status

Masts Status is shown as:

- “NESTED” when the mast is fully nested
- “DEPLOYED” when the mast is fully extended
- An intermediate extension height (in meters or feet) as interpreted from the proximity sensor in real-time as the mast extends

The intermediate extension height is shown:

- In metric mode as “XX.XX M” where:
  - XX.XX is the extension of the mast in meters
  - Resolution is 0.002 meters
  - Accuracy is ±0.05 meters
- In US customary mode as “XX.XX F” where:
  - XX.XX is the extension of the mast in feet
  - Resolution is 0.01 feet
  - Accuracy is ±0.17 feet

Note: Extension shown on the display of the Control Box is measured from the top of the mast. Height readout does not include the nested height of the mast.

Remember:

Total Height	=	Mast Extension Height (Shown on Display)	+	Mast System Nested Height	+	Mounted Height of Mast System

Note: If using the PC Interface, it is possible to enter a Mast Offset Height to account for the nested height of the mast system and the height the mast system is off the ground.

In order to output the most accurate intermediate extension height, the mast should:

1. Be returned to the fully nested position where the intermediate extension height automatically returns to zero.

2. Then be taken to the height required with little or no additional up and down movement as this additional movement can add inaccuracies within the intermediate extension height output.

Cycle Counts and Temperature

When the mast is nested and the UP/DOWN switch held DOWN, the display alternately shows the cycle count of the mast and the temperature inside the Control Box. The cycle count is used during Periodic Maintenance (Section 8.4).

Error Codes

In the event of any unexpected switch feedback, communication errors, or amp draws on the mast, the display will show the associated error message. See Troubleshooting (Section 9).

3.5.1.2 UP/DOWN Switch

The UP/DOWN Switch is:

- Used to extend and retract the mast
- Located on the side of the Control Box
- Protected by a switch guard and waterproof boot
- A SPDT (Mom-Off-Mom) toggle switch

3.5.1.3 OVERRIDE Switch

The OVERRIDE Switch is:

- Used with the UP/DOWN Switch to ignore any errors returned by the Control Box in order to retract the mast
- Located on the side of the Control Box
- Protected by a switch guard and waterproof boot
- A SPST (Off-Mom) toggle switch

3.5.1.4 Bulkhead Connectors

The Control Box contains the following military screw-type connectors:

- **J1:** a 9-pin connector for customer power and handshake lines
- **J2:** a 7-pin connector for sensor interface
- **J3:** a 2-pin connector for the motor cable from the mast
- **J4:** an 8-pin connector for optional components such as the PC Interface, Hand-Held Remote Control, or D-TEC. The J4 connector on the standard Control Box is RS-485, however an RS-422 option is also available

3.5.1.5 Printed Circuit Board

The Control Box contains a printed circuit board.

The printed circuit board has three pairs of handshakes contacts as follows:

- An enable input (for a hatch switch, vehicle stationary or other precondition contact closure located between pins A and B on J1)
    - An open circuit will cause the Control Box to display its software version and will inhibit extension
    - A closed circuit is required between these pins to enable mast operation
- A fully extended output (located between pins C and I of J1) is closed when fully extended
- A fully nested output (located between pins G and H of J1) is closed when fully nested

The rated output of the handshake contacts is one ampere at 28 VDC. The contacts change state when the mast is fully extended or nested. These shall be used as customer interlocks or indicators (visual or audible). For more information on electrical installation of the mast system, see Section 5.6.7.

3.5.2 PC Interface

The mast system ships standard with Stiletto Control Remote Access Management (SCRAM) software enabled. If desired, this allows the operator to control the mast system through a PC or proprietary control system. SCRAM provides the same functionality as the Control Box, plus additional functions and information not directly accessible through the standard hardware interface.

Functions include controls to:

- Extend the mast
- Retract the mast
- Nest the mast
- Stop the mast
- Move the mast to a specific desired height
- Input the Mast Offset Height
- Monitor mast parameters and limit switch inputs in real-time
- Enable Blackout mode

In addition to the SCRAM software, The Will-Burt Company also offers the PC Interface Application Notes which allow a customer to create their own GUI that will communicate with the Control Box to operate the mast system. This is particularly useful when integrating the mast system into a proprietary control system. When using the Application Notes, the customer must write their own software using the commands provided in the Application Notes.

When using a PC or proprietary control system to operate the mast system, it will be necessary to connect the PC or proprietary control system to J4 on the Control Box. The standard protocol for J4 is RS-485, however, modified Control Boxes using RS-422 are available. To connect from the Control Box to the PC or proprietary control system, The Will-Burt Company offers various lengths of RS-485 to RS-232 Communications Cables, RS-485 to USB Communications Cables, and Y-Cables (which, when used with the Communications Cables, allow for the use of both a HHRC and PC or proprietary control system).

For more information about SCRAM, PC Interface Application Notes, or cables used to connect the mast system and PC or proprietary control system, contact The Will-Burt Company's Sales team.

3.5.3 Accessory Options (Sold Separately)

This section describes accessory options available for the mast system.

3.5.3.1 Hand-Held Remote Control

The optional Hand-Held Remote Control (HHRC):

- Contains an SPDT (Mom-Off-Mom) toggle switch (UP/DOWN) protected by a switch guard and waterproof boot to extend and retract the mast
- Uses three LED lights to backlight text to indicate the status of the system as follows:
  - “EXTENDED” to indicate the mast is fully extended
  - “PARTIAL” to indicate the mast is partially extended
  - “NESTED” to indicate the mast is fully nested
- Includes a cable with a MS3106 8-pin screw-type connector that attaches to the front of the Control Box at bulkhead J4. Multiple cable lengths are available.
- Is enclosed in a NEMA 4X box
- Does not have an alphanumeric display to show intermediate extension readouts

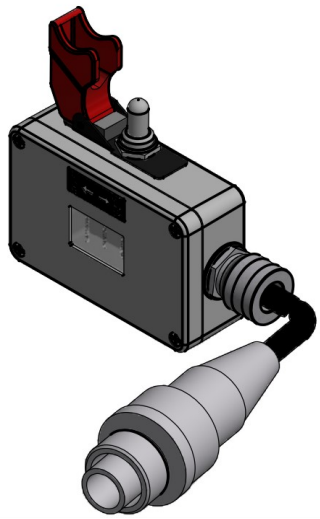

Figure 3-13 Hand-Held Remote Control

The optional HHRC comes in multiple configurations including:

- Black HHRC with 20 ft. Cable
- White HHRC with 20 ft. Cable
- Black HHRC with 50 ft. Cable
- Turkish HHRC with 20 ft. Cable

For additional information on the HHRC, see www.willburt.com.

3.5.3.2 D-TEC®

The D-TEC® Safety System is a safety device which:

- Mounts at the highest point of the mast/payload configuration
- Provides overhead power line field detection
- Provides above-the-mast illumination

The D-TEC® system automatically stops mast extension when an electric field above the sensing threshold is detected providing added protection for the operator and equipment from overhead power line hazards. This unit is intended as a safety tool, and in no way is a substitute for common sense and caution.



Figure 3-14 D-TEC (P/N: 5354901 Shown)

The D-TEC Features:

- Two detection modes that operate simultaneously:
  - Electric Field (E-Field) detection to sense the presence of nearby high voltage AC.
  - Magnetic Field (H-Field) detection to sense the presence of nearby high current AC.
- An LED Look-Up Light and an Ambient Light Sensor to ensure the Look-Up Light only illuminates when it is dark.

The D-TEC communicates over an RS-485 link with the Control Box which acts as the communications master. This means the Control Box initiates all communication. The D-TEC only allows or disallows the operator to extend the mast and does not provide direct power to the mast. Both the D-TEC and the Control Box perform self-diagnostic routines each time the mast system is powered up.

Specifications for the D-TEC are listed in Table 3-1.

Table 3-1 D-TEC Specifications

Functional Characteristics	Operational Parameters
Detection	Simultaneous AC Voltage (Electric Field) and Electromagnetic and Electrostatic (Magnetic Field) Detection
Minimum Voltage Detection	2.3 Kilovolts/Meter at 0° (Reduced with angle)
Look-Up Light	LED
Input Voltage	11 to 33 VDC
Power Requirements	12 VDC 10 Amps or 24 VDC 5 Amps
Operating Temperature Range	-40°C to 71°C (-40°F to 160°F)
Duty Cycle	100%

For more information on the D-TEC, see www.willburt.com.

3.5.3.3 Additional Accessory Options

Table 3-2 describes a number of additional accessory options available for the mast system.

Table 3-2 Additional Accessory Options

Accessory	Description
Input Power Cable Pigtails	Connects customer power to the mast system. Mast systems ship standard with a Power Cable Connector that the customer wires according to the specific mounting application needs and then attaches to J1 on the Control Box or the EMI filter input. The optional Input Power Cable Pigtails have a Power Cable Connector with pre-wired flying leads of predetermined lengths to simplify the process.
P/N: 4674701	Unshielded 5 Meter
P/N: 4674702	Unshielded 8 Meter
P/N: 4784001	Shielded 5 Meter
Roof Seal Kit (P/N: 913730)	4M model: Used with internal mounting applications (i.e. mounting inside an enclosure of vehicle.
Nycoil® Cable Conduit	Manages payload cables. The Nycoil Cable Conduit length should be two times the difference between the mast extended and nested heights. To go around the mast, a minimum of 1 ¼ inch (31.8 mm) cable ID with a 21.5 inch (546 mm) coil OD is required. Smaller sizes are available if the Nycoil Cable Conduit is offset.
Power Supply Kit	
110 VAC Power Supply Kit (P/N: 4655201)	Converts 110 VAC input to 24 VDC output.
Stiletto Capacitor Bank Kits	Used when the customer power supply is not strong enough to start the mast system.
P/N: 4534504	Has a 12-inch (30.5 cm) cable
P/N: 4534501	Has a 36-inch (91.4 cm) cable
P/N: 4534502	Has an 84-inch (213.4 cm) cable
P/N: 4534503	Has a 120-inch (304.8 cm) cable
P/N: 4534509	Has a 360-inch (914.4 cm) cable

For more information on these and other additional accessory options, or customized solutions to customer-specific scenarios, see www.willburt.com.

4 Technical Data

This section describes specifications for the mast system. The specifications listed in this section are for catalog masts only. Masts with other heights, capacities, and finishes are available. For more information on additional mast sizes, capabilities, and finishes, see www.willburt.com.

Table 4-1 Stiletto Mast Specifications

Specifications*	3-Meter	4-Meter	6-Meter	10-Meter	15-Meter
Physical Characteristics					
Fully Extended Height (+102 / -0 mm) (+4.0 / -0 inches)	3 m	4.1 m	5.79 m	9.9 m	15 m
	9.8 feet	13.5 feet	19 feet	32.5 feet	49.2 feet
Fully Nested Height (+25 / -0 mm) (+1 / -0 inches)	1 m	1 m	1.17 m	1.7 m	2.4 m
	41 inches	39 inches	46 inches	67 inches	94.5 inches
Rated Payload Capacity (center of gravity within 300 mm of mast centerline)	122 kg	113 kg	113 kg	113 kg	91 kg
	270 lb.	250 lb.	250 lb.	250 lb.	200 lb.
Approximate Mast System Weight (Including the Support Bracket Assembly, Control Box, and Cables)	80 kg	89 kg	95 kg	121 kg	145 kg
	176 lb.	196 lb.	209 lb.	267 lb.	320 lb.
Approximate Control Box Weight	2.5 kg				
	5.5 lb.				
Mast Footprint	286 x 448 mm	446 x 284 mm			
	11.25x17.63 inches	17.56 x 11.19 inches			
Control Box Footprint	311 x 203 mm				
	12.23 x 8.0 inches				
Mast Type	Electro-Mechanical				
Drive System	SSTL Drive Screw				
Emergency Operation	Manual Hand-Crank				
Collar Type	Auto Self-Locking with Integrated Icebreakers				
Number of Sections	5	9	9	9	9
Tube Outside Diameter Range (Base Tube to Top Tube)	262 to 185 mm	262 to 110 mm	262 to 110 mm	262 to 110 mm	262 to 110 mm
	10.31 to 7.3 inches	10.31 to 4.31 inches	10.31 to 4.31 inches	10.31 to 4.31 inches	10.31 to 4.31 inches
Number of Keys	2				

Table 4-1 Stiletto Mast Specifications (Continued)

Specifications*	3-Meter	4-Meter	6-Meter	10-Meter	15-Meter
Tube Material	Carbon Fiber				
Height Readout	Meters or US Customary (Request when ordering. Defaults to meters.)				
Electrical Characteristics					
Operating Voltage Range	18.1-33 VDC				
Optimal Voltage (MIL-STD-1275)	28 VDC				
Steady State Current Draw (Maximum Operating Conditions)	12 Amps (vertical, 28VDC, 250 lb. Payload) Up to 40 Amps (angled deployment; harsh conditions)				
Inrush Current (Maximum Operating Conditions)	120 Amps (for 25 milliseconds)				
Wind Performance					
Deployment Wind Speed	80 km/h	80 km/h	64 km/h	55 km/h	53 km/h
	50 mph	50 mph	40 mph	34 mph	33 mph
Survival Wind Speed*	177 km/h	177 km/h	160 km/h	129 km/h	105 km/h
	110 mph	110 mph	100 mph	80 mph	65 mph
Rotational Accuracy (Twist)	±1°				
Extension and Retraction Performance (See Note Below)					
Approximate Extension Time (Powered, 28 VDC)	≤ 53 seconds	≤ 70 seconds	≤ 105 seconds	≤ 185 seconds	≤ 278 seconds
Maximum Tilt From Vertical (See Note Below)					
Operational	10°	10°	10°	10°	5°
Maximum Altitude Above Sea Level					
Operational	4572 m (15,000 feet)	4572 m (15,000 feet)	4572 m (15,000 feet)	4572 m (15,000 feet)	4572 m (15,000 feet)
Temperature Performance (See Note Below)					
Operating Temperature Range	-40°C to 55°C (-40°F to 131°F)				
Storage Temperature Range	-40°C to 71°C (-40°F to 160°F)				

Table 4-1 Stiletto Mast Specifications (Continued)

Specifications*	3-Meter	4-Meter	6-Meter	10-Meter	15-Meter
Airborne Noise Emissions (measured according to EN ISO 3744:2010)					
Deploying & Retracting	equivalent A-weighted sound pressure level at the operating position is less than 70 dB(A)				
Guying					
Is guying required?	No				
Is guying an option?	Yes. Consult factory.				

* Note:

- Dimensions and specifications are provided for reference only and are not intended for vehicle design purposes.
- Specifications may be subject to change without notice.
- Maximum payload weight will impact other performance specifications. Consult The Will-Burt Company for additional information.
- Maximum Tilt from Vertical assumes the rated payload with the center of gravity within 300 mm of the mast centerline.
- Typical Payload Sail Area (CD = 1.5) is as follows:
  - 3-meter, 4-meter, and 6-meter Stiletto: 0.74 square meters (8 square feet)
  - 10-meter Stiletto: 0.56 Square meters (6 square feet)
  - 15-meter Stiletto: 0.37 square meters (4 square feet)

  Consult factory for larger sail areas, as the payload and wind capacities may be reduced.

This page intentionally left blank.

5 Installation

This section describes the physical and electrical installation of the Stiletto and provides the general procedures that must be followed to ensure a successful installation. Be sure to read and understand the entire installation procedure and the Safety Summary (Section 1) before beginning installation.

The exact installation procedures may vary based on the configuration of the mast system being used and the installation environment.

5.1 Pre-Installation Check

Before installing the system, ensure:

- All installers read and understand the entire installation procedure
- Only a properly trained and qualified certified electrician performs electric installations and maintenance
- All components are included (Section 3.4)
- All required equipment is readily available (Section 5.2)
- The mounting structure is level with sufficient room to mount the system (Section 5.6.1)

When installing in a vehicle, that the vehicle is stationary and on a level surface

5.2 Recommended Installation Tools

Table 5-1 lists recommended tools and materials for installation.

Table 5-1 Recommended Installation Tools & Materials

Tools and Materials		
Safety Glasses	Work Gloves	Nitrile or Vinyl Gloves
Hard Hat or Helmet	Hearing Protection	Safety Shoes
Appropriate Hardware (Section 5.3)	Drill	Level
Measuring Tape	Rubber Mallet	Torque Wrench
Wrenches	Washers or Spacers (For Shimming)	
Hoist	Sling	Rags (Clean and Dry)
Loctite® Blue 242/243 or Equivalent	Anti-Seize	

* Note:

- Depending on the local, regional, and national standards and codes of practice, and the environment, additional personal protective equipment may be necessary.
- Depending on the mast system configuration, additional equipment, including but not limited to electrical components (e.g. wire, switches, fuses, circuit breakers, etc.), may be required.
- When disposing of any disposables or components, do so according to any applicable local, regional, and national standards and codes of practice.

5.3 Installation Hardware

Table 5-2 describes hardware that may be used during installation. Depending on the specific installation application, all hardware may not be used.

Table 5-2 Installation Hardware

	Hardware	Supplied By	Notes
Support Bracket Assembly (bolting the halves together)			
	(12) 3/8x1.0x0.1 300 SSTL Flat Washer (P/N: 2054)	The Will-Burt Company	Ships with Mast System
	(6) 3/8-16x1.0 18-8 SSTL Bolts (P/N: 0848)	The Will-Burt Company	Ships with Mast System
	(6) 3/8 18-8 SSTL Lock Washers (P/N: 0801)	The Will-Burt Company	Ships with Mast System
	(6) 3/8-16 18-8 SSTL Nuts (P/N: 0817)	The Will-Burt Company	Ships with Mast System

Table 5-2 Installation Hardware (Continued)

Hardware	Supplied By	Notes
Support Bracket Assembly (To the Support Structure)		
(6) M10 (⅜ Inch) Sets of Stainless Steel Hardware	Customer	The bolts should be sized to length to allow for the thickness of the Support Bracket Assembly, support structure, any shims, and all mounting hardware (e.g. flat washers, lock washers, and nuts).
Base of Mast System (To the Mounting Surface)		
(4) M12 (½ Inch) (Minimum) Sets of Stainless Steel Hardware	Customer	The bolts should be sized to length to allow for the thickness of the base of the mast, mounting surface, any shims, and all mounting hardware (e.g. flat washers, lock washers, and nuts). Use heavy-duty, extra-thick (MS 15795-819) stainless steel flat washers.
Control Box (To the Support Structure)		
(6) M6 (¼ Inch) Sets of Stainless Steel Hardware	Customer	The bolts should be sized to length to allow for the thickness of the Control Box, mounting surface, any shims, and all mounting hardware (e.g. flat washers, lock washers, and nuts).
Optional EMI Filter (To the Support Structure)		
(4) M4 (#8) Sets of Stainless Steel Hardware	Customer	
Ground Straps		
10-32 UNF-2B Hardware	The Will-Burt Company	Ships with Mast System
Payload (To the Mast System)		
(6) ¼-20 Sets of Hardware	Customer	The standard Payload Attachment Interface comes with (6) ¼-20 holes. When using stainless steel hardware, use an anti-seize to prevent galling.
* Unless otherwise indicated, the mounting hardware must include proper means to resist vibration loosening such as thread-locking compound and locking hardware. Torque all hardware as appropriate for its size and grade. Torque values in these instructions assume the use of The Will-Burt Company provided hardware. Depending on the specific installation application, all hardware may not be used. Additional hardware may be required for additional accessories, or customer-specific applications.		

5.4 Installation Dimensions

Dimensions provided are for reference only and are not intended for vehicle design purposes. Depending on the mast system and components being used, the exact design of components may vary. Masts with other heights, capacities, and finishes are available. For more information on additional mast sizes, capabilities, and finishes, see www.willburt.com.

5.4.1 Mast Installation Dimensions

Table 5-3 Mast Installation Dimensions

Model	A		B		C*	
	mm	in	mm	in	mm	in
3-Meter	213.9	8.42	480	18.9	653	25.71
4-Meter	213.9	8.42	480	18.9	476	18.75
6-Meter	213.9	8.42	480	18.9	653	25.71
10-Meter	213.9	8.42	480	18.9	1188.7	46.8
15-Meter	213.9	8.42	480	18.9	1905	75.0
*Support Bracket height can be adjusted						

Top Down View

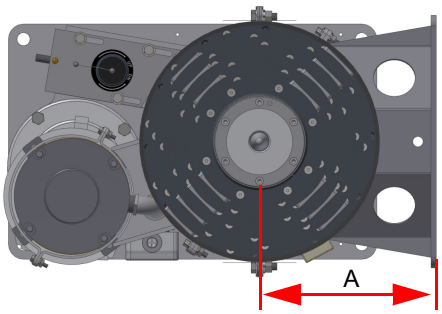

Side View

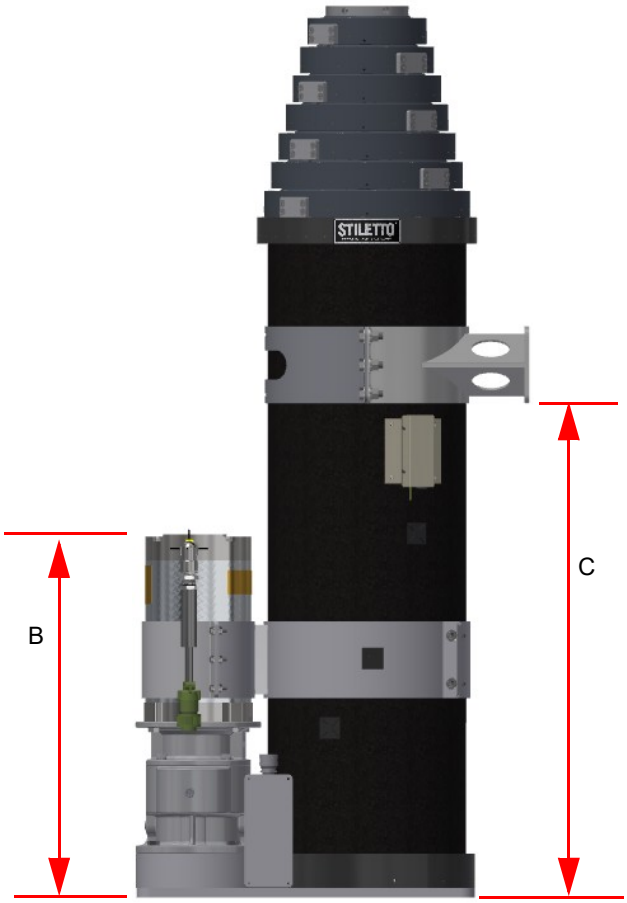

Bottom Up View

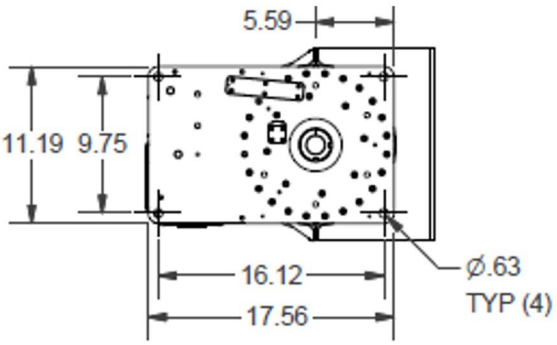

Figure 5-1 Mast Installation Dimensions (Not to Scale)

5.4.2 Support Bracket Assembly Dimensions

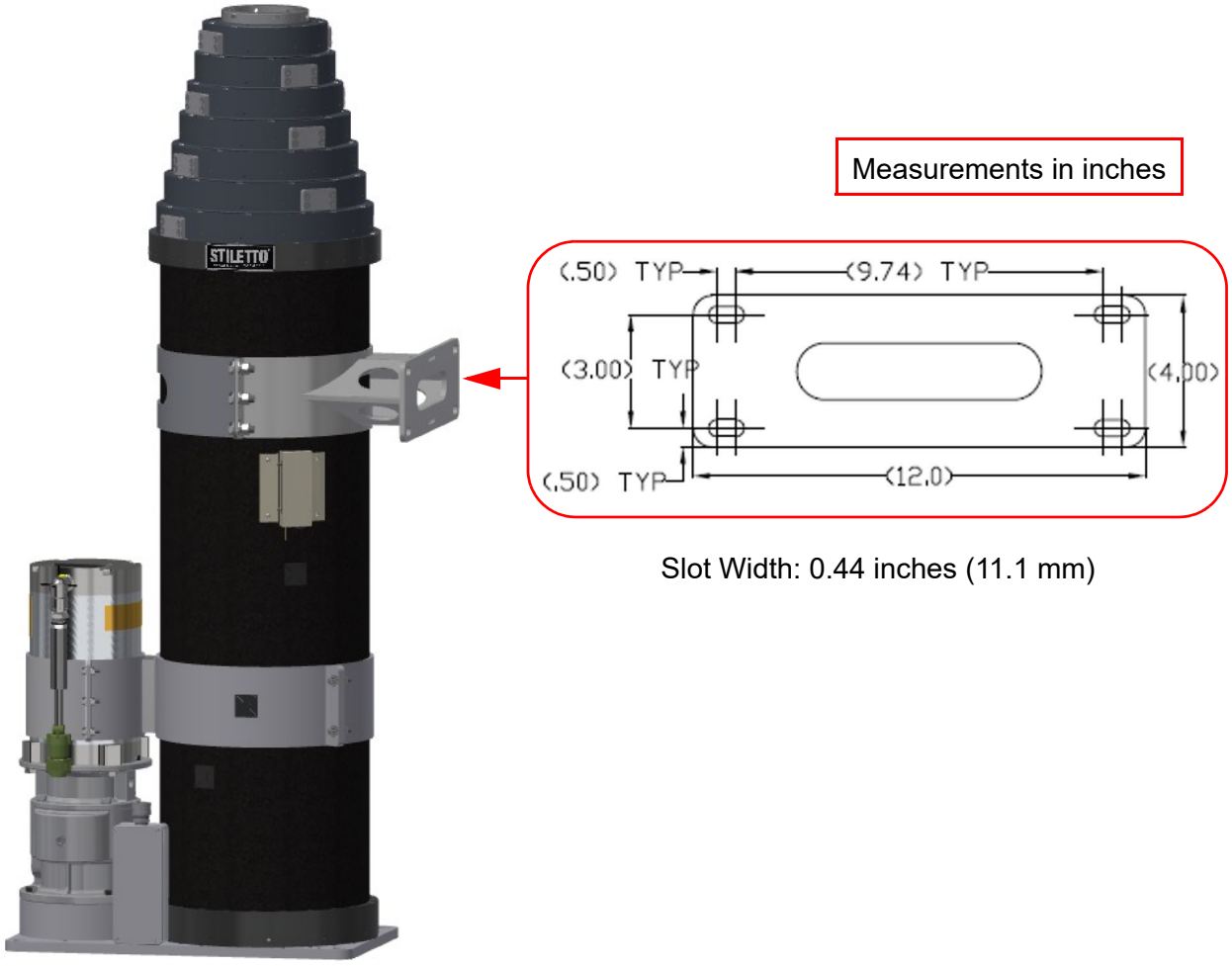

Figure 5-2 Support Bracket Assembly Bolt Hole Pattern (not to scale)

5.4.3 Control Box Dimensions

A		B		C		D		E	
mm	inch	mm	inch	mm	inch	mm	inch	mm	inch
13	0.5	102	4	146	5.75	191	7.5	203	8

Ø F		G		H		J		K	
mm	inch	mm	inch	mm	inch	mm	inch	mm	inch
7	0.28	13	0.5	102	4	165	6.5	191	7.5

L		M		N		P		Q	
mm	inch	mm	inch	mm	inch	mm	inch	mm	inch
13	0.5	191	7.5	203	8	190	7.49	203	8

R		S		T					
mm	inch	mm	inch	mm	inch				
311	12.23	109	4.3	211	8.29				

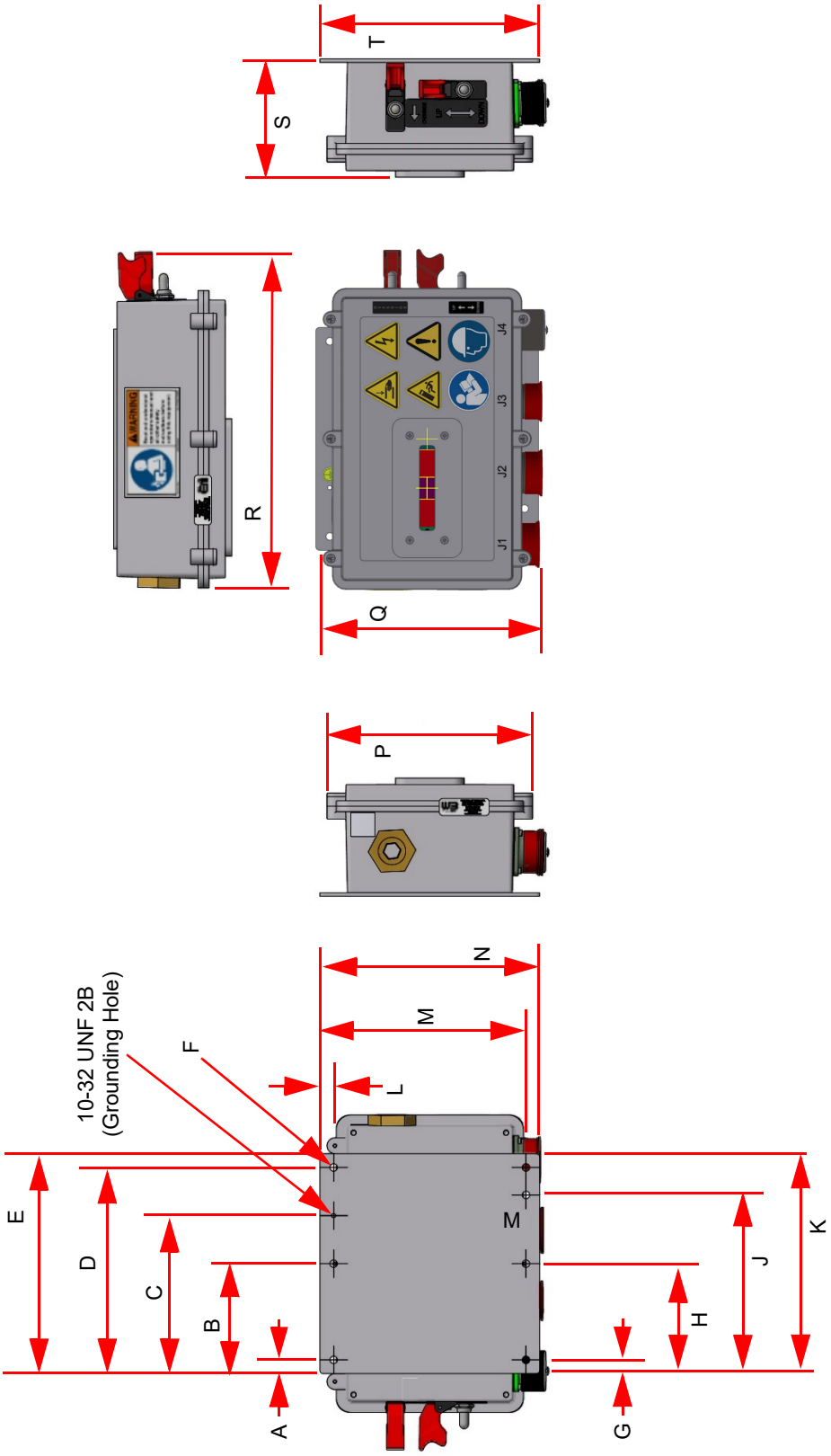

Figure 5-3 Control Box Installation Dimensions (Measurements in Inches)

5.4.4 EMI Filter Dimensions (Optional)

Inch [mm]

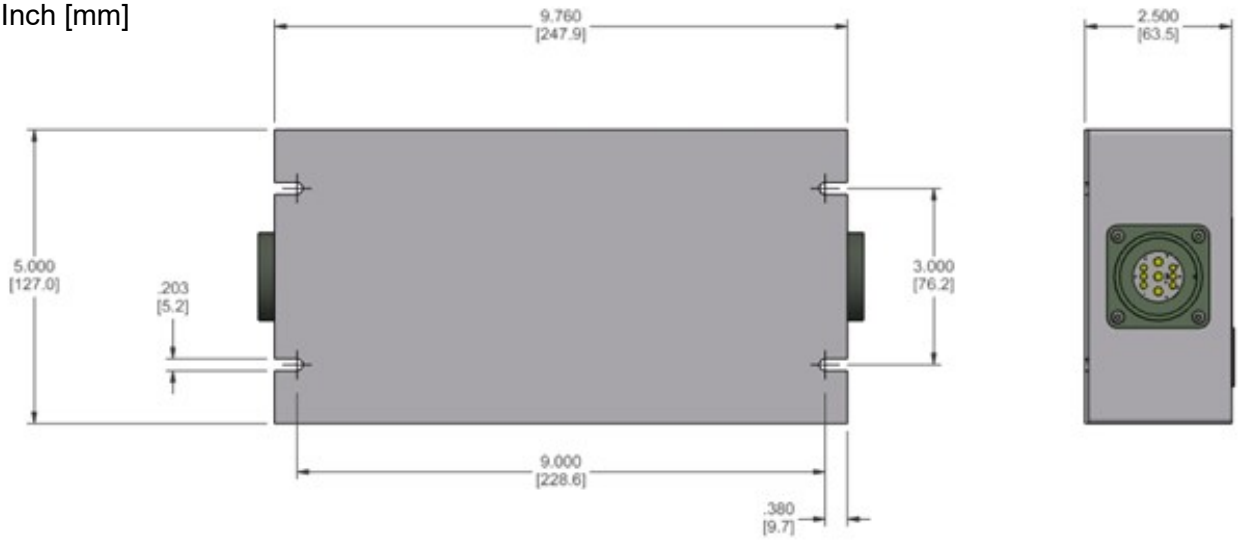

5.5 Power Supply Requirements

This mast requires a 28VDC power supply that meets the characteristics set forth by MIL-STD-1275. If the application or installation does not allow for such a power supply, storage batteries or a power supply supplemented with a capacitor bank are also viable options.

The motor draws about 15 amps continuously and about 120 amps on start-up under “normal” conditions. However, to ensure proper operation under high load and/or icing conditions, a minimum 18.1 Volt supply voltage must be maintained at the control at up to 60 amps for 2 second intervals and 40 amps continuous.

Table 5-4 lists the specifications for the auto-resetting circuit breaker in the system.

Table 5-4 Circuit Breaker Specifications

Functional Characteristic	Specification*
Breaker Current Rating	15
Approximate Open Time 1.8 Seconds at 600% Rated Current	90
Approximate Open Time 2.3 Seconds at 500% Rated Current	75
Approximate Open Time 4.3 Seconds at 400% Rated Current	60
Approximate Open Time 8.8 Seconds at 300% Rated Current	45
Approximate Open Time 18.2 Seconds at 200% Rated Current	30
Must Carry 100% Rated Current for Minimum 1 Hour	15

Contact The Will-Burt Company with any questions.

5.6 Mast System Installation

This section describes installation of the mast system, assuming an external mounting application. For internal mounting applications (i.e. mounting inside an enclosure or vehicle), The Will-Burt Company recommends:

- Using a Roof Seal Kit (P/N: 913730)
- Redirecting water from the bottom drain holes to outside the enclosure. An optional drain pan is available (P/N: 913749)

For additional information, please see the *Stiletto Series Roof Seal Kit Installation Instructions* (TP-5532101). If necessary, contact The Will-Burt Company to obtain these instructions.

These instructions assume that the mounting hole locations are not pre-drilled and that the mast system components will be used as templates to drill these holes during installation. Alternatively, the mounting hole locations could be found and pre-drilled using the installation dimensions (Section 5.4). When pre-drilling the mounting holes, use care to ensure the mounting holes properly align.

5.6.1 Mounting Location Requirements

The following factors must be included when selecting an appropriate mounting location:

- The mounting structure must have sufficient room to mount the system. Ensure the installation site does not interfere with the cables or crowd them into the mast where, during retraction, they can be pinched between collars or speared by trigger posts.
- The mounting structure must be level in all directions, solid, and capable of holding the forces required by the bolts. Check the strength and rigidity of the mounting structure where the system is to be attached. Reinforce as necessary. The support bracket and base support structure shall be mounted to a common frame (i.e. not separated by vehicle suspension elements).
- The area underneath the mast must be free of obstructions to allow for accessibility to the fasteners.
- When installing in a vehicle, ensure the vehicle is stationary and on a level surface.

- Do not obstruct the drain holes (for rainwater and condensation) located on the bottom of the base plate under the mast base tube (Figure 5-4). Keep any personnel or sensitive equipment away from the drain hole direction. An optional drain plate is available.

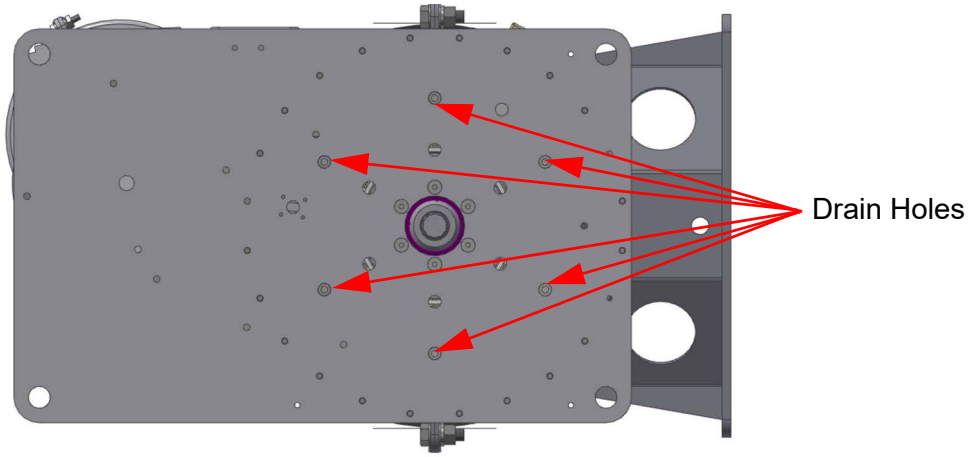

Figure 5-4 Drain Hole Locations

- Cables will eventually need routed between components of the system as follows:
  - Customer power to the Control Box
  - The motor cable and the mast sensor cable must be routed between the Control Box and mast

Additional cables may need routed for optional components.

5.6.2 Unpacking & Handling

During installation, it will be necessary to lift the mast. The process described in this manual represents a possible method of lifting the mast. Depending on the environment and equipment available, other methods may work better. Use the best and safest method for your circumstances.

Unpack and handle the items as follows:

1. Carefully open the shipping crate.

2. Inspect for any shipping damage. If damage has occurred, notify the carrier.

3. Remove all loose components.

4. Remove the top half of the wooden saddles that secure the mast in place (Figure 5-5).

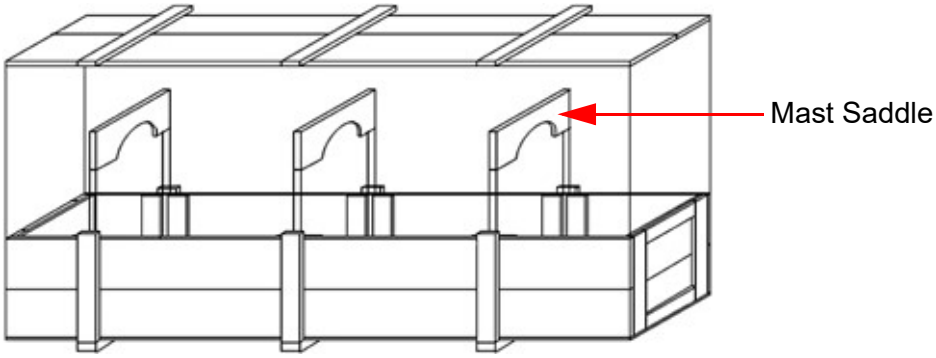

Figure 5-5 Shipping Crate

5. Outfit the mast with a sling and hoist capable of supporting the mast weight. The sling must support the mast from at least two points. Attach the sling at the center of gravity label so that horizontal balance and control can be maintained while positioning the mast. Use care not to damage or crush the fully extended limit switch or fully extended limit switch cable while transporting the mast. The base tube collar can be used to support the mast weight during installation.

6. Slowly lift the mast until just free of the mast saddles.

   If necessary, lower the mast and adjust the sling as necessary to balance the mast.

7. Ensuring the sling does not catch on anything, lift the mast without any sharp or jerking motions until it is free of the shipping crate.

8. Slowly move the mast to the desired mounting location. The hoist operator should be able to view the mast at all times to ensure the mast does not collide with any obstructions.

9. Slowly lower the mast until the mast is on the mounting surface and the weight of the mast has settled. Stop lowering the mast once the mast weight has settled.

10. Ensure the mast is temporarily secured to prevent it from tipping over during the installation process.

The Will-Burt Company recommends keeping the shipping crate for transporting the mast, for example, if shipping the mast back to the factory for refurbishment.

5.6.3 Secure the Support Bracket Assembly

To secure the support bracket assembly:

1. Carefully move the mast into position in the mounting location. Be certain to orient the mast so the operator has a clear view of the hazard labels.

2. Ensure the mast is level in all directions. If necessary, shims may be added to correct the alignment of the mast. It is necessary to check the mast in two places 90° apart when leveling.

3. Determine the desired location for the support bracket assembly. Refer to Section 5.4.1 for the minimum height of the support bracket assembly on the mast.

4. Secure the support bracket assembly around the base tube with the hardware included. Shim as necessary to avoid overtightening the support bracket assembly on the base tube (overtightening damages the mast). The mounting hardware must include proper means to resist vibration loosening such as thread-locking compound or locking hardware. Torque to 190-240 in.-lb. (21-27 N-m).

5. Use the support bracket as a template to drill holes in the desired support structure. Ensure the mast system is level in all directions during drilling.

6. Loosely secure the support bracket to the support structure with six ⅜ inch (M10) sets of customer-provided stainless steel hardware. Do not torque the hardware at this point. This will be done later in these procedures. The mounting hardware must include a proper means to resist vibration loosening such as thread-locking compound and/or locking hardware.

5.6.4 Secure the Base of the Mast

To secure the base of the mast:

1. Use the base of the mast as a template to drill holes through the mounting surface.

2. Loosely secure the mast system to the mounting surface with four ½ inch (M12) sets of customer-provided stainless steel hardware. Use heavy-duty, extra-thick (MS 15795-819) stainless steel flat washers. Do not torque the hardware at this point. This will be done later in these procedures. The mounting hardware must include a proper means to resist vibration loosening such as thread-locking compound and/or locking hardware.

5.6.5 Finalize Physical Installation of the Mast

With the mast loosely secured at the support bracket assembly and at the base of the mast:

1. Ensure the mast is level in all directions. If necessary, shims may be added to correct the alignment of the mast. It is necessary to check the mast in two places 90° apart when leveling.

2. Torque all hardware as appropriate for its size and grade to secure the mast in place against the support structure and mounting surface. Ensure the mast remains level as it is torqued. Recommended torque values for stainless steel fasteners are as follows:

M10:	245-290 in.-lb. (28-33 N-m)
3/8-16:	190-240 in.-lb. (21-27 N-m)
1/2-13 & 1/2-20:	450-530 in.-lb. (51-60 N-m)
M12:	355-425 in.-lb. (40-48 N-m)

Use manufacturer's specified torque values for other fastener materials/grades.

3. Attach one end of the Ground Strap to the mast at any of the Ground Stud locations. The #10-32 screws provided with the Ground Strap can be installed in any of the Ground Stud locations as needed. The Ground Stud locations are designated with the electrical ground label (Figure 5-6). Torque to 24-31 in.-lb. (2.7-3.5 N-m).

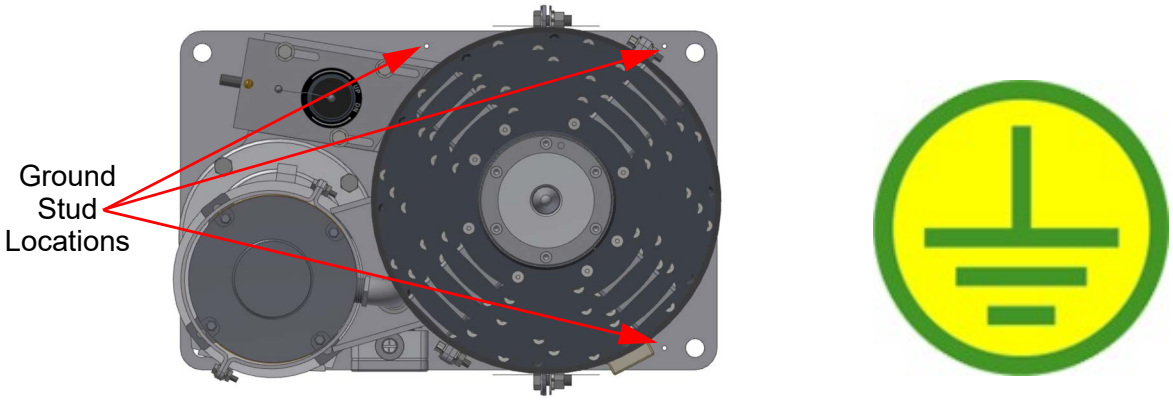

Top Down View of Mast

Electrical Ground Label

Figure 5-6 Ground Stud Locations

4. Attach the other end of the Ground Strap to a known earth ground such as the chassis of the vehicle. Torque to 24-31 in.-lb. (2.7-3.5 N-m).

5.6.6 Secure the Control Box

The Control Box and EMI Filter (for CE) may be installed outside or inside an enclosure such as the cab of a vehicle.

To install the Control Box and EMI Filter (for CE):

1. Using the Control Box and EMI Filter as a template, drill six M6 (¼ inch) clearance holes into the mounting structure for the Control Box. Drill four clearance holes for M4 fasteners for the EMI Filter.

   Note: The Control Box has seven mounting holes. It is only necessary to use six of the mounting holes to secure the Control Box.

2. Attach the Control Box using six M6 (¼ inch) stainless steel fasteners. Attach the EMI Filter using four M4 stainless steel fasteners. Torque all hardware as appropriate for its material and size. The mounting hardware must include proper means to resist vibration loosening such as thread-locking compound or locking hardware. The recommended torque for stainless steel M6 fasteners is 60-72 in.-lb. (7-8 Nm). The recommended torque for stainless steel M4 fasteners is 19-23 in.-lb. (2.1-2.6 Nm).

3. Use 10-32 UNF-2B hardware and a Ground Strap to ground the Control Box from the designated ground location (Figure 5-7) to the chassis of the vehicle or a known earth ground. The ground location on the Control Box is designated with the electrical ground label. Torque the ground strap hardware to 24-31 in.-lb. (2.7-3.5 N-m).

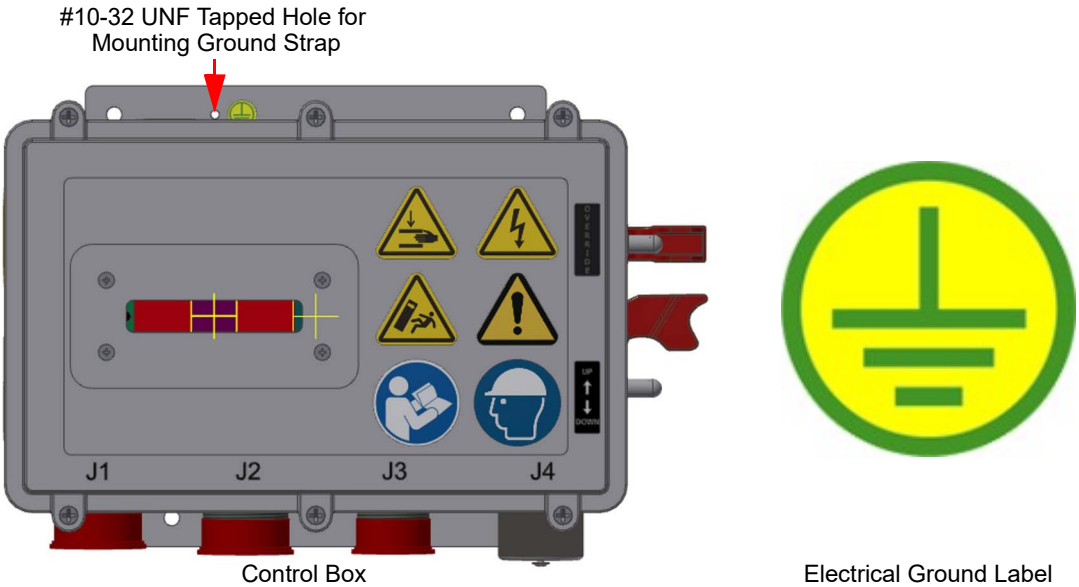

Figure 5-7 Control Box Ground Location

5.6.7 Electrically Install the Mast System

Power must be disconnected before connecting or disconnecting any system connector. For example, power must be disconnected when connecting or disconnecting J1, J2, J3, and J4 on the Control Box.

To electrically install the mast system:

1. Refer to Figure 5-8 for an overview of the system wiring, and to Figure 5-9 for the Control Box schematic (EMI filter shown).

   Note: The EMI filter is required for CE conformity. For non-CE applications, customer power will connect through the Power Cable Connector directly at J1 on the Control Box.

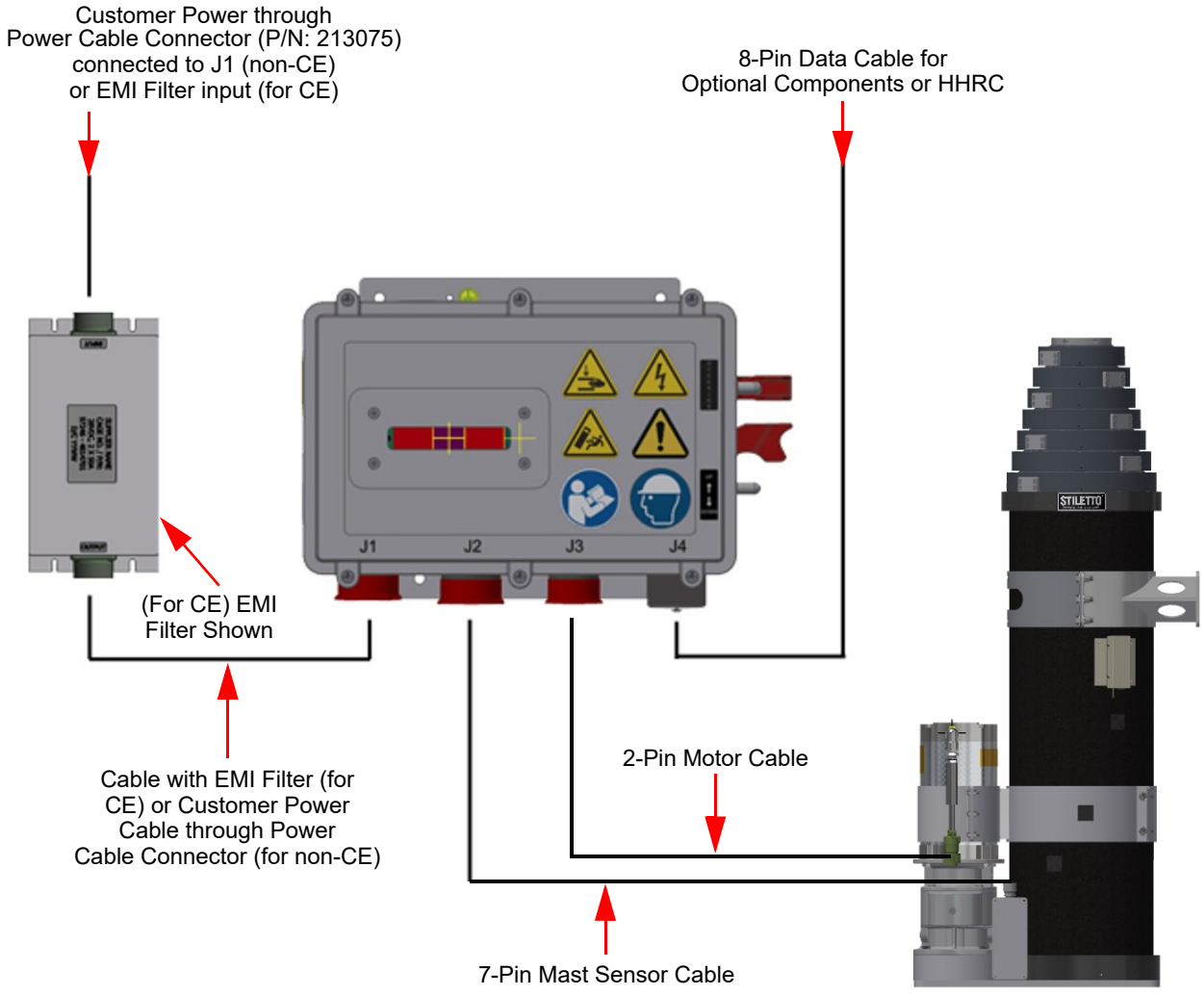

Figure 5-8 Stiletto Wiring (Not to Scale)

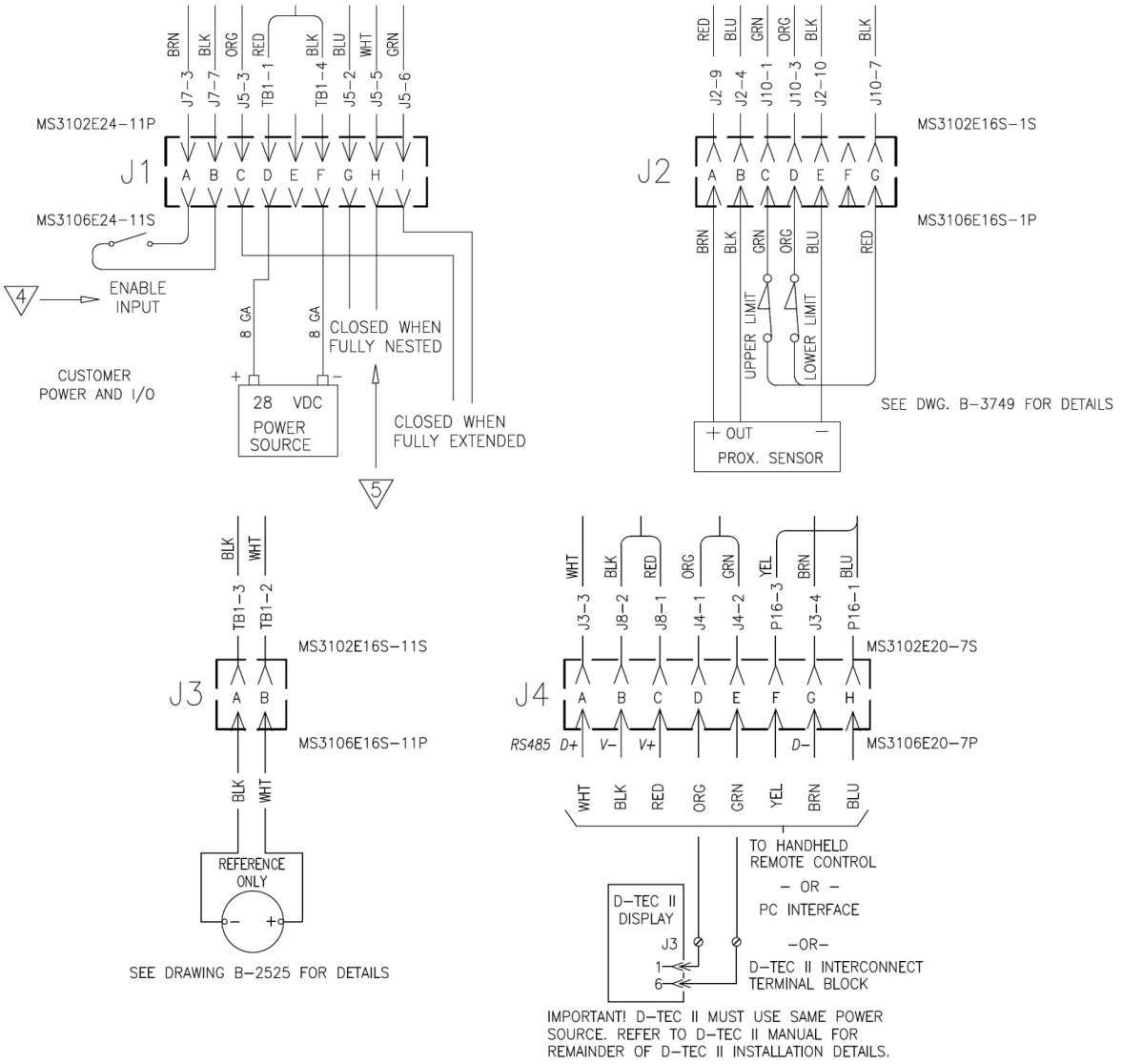

Figure 5-9 Control Box Schematic Views (based on WD-46002 Rev 00) [EMI Filter not shown]

2. Plug the 7-pin mast sensor cable into bulkhead connector J2 on the Control Box. Screw the connector in place so that the cable is secure.

3. Plug the 2-pin motor cable into bulkhead connector J3 on the Control Box. Screw the connector in place so that the cable is secure.

4. Depending on the mast system configuration, a data cable may be used. For example, a data cable is used with optional components including the Hand-Held Remote Control (HHRC), PC Interface, or D-TEC.

   If used, plug in the 8-pin data cable to bulkhead connector J4. Screw the connector in place so that the cable is secure.

   If not used, ensure the dust cap to J4 is installed and secure.

5.6.8 Connect Power to the Mast System

Power and the handshake lines enter the Control Box through bulkhead connector J1. The Will-Burt Company supplies a 9-pin power cable connector (Figure 3-7) to connect to J1. If the EMI filter is required (for CE conformity), the connector plugs into the input side of the filter and the cable supplied with the filter connects from the filter output side to the Control Box J1. The customer is responsible for integrating 8-gauge (10 mm^2) power lines (with optional ground) and any handshake lines into the Power Cable Connector. With cable runs longer than three meters (ten feet), a lower gauge wire will be needed.

The enable input circuit (hatch switch) on J1 Pins A and B require a closed circuit to enable mast operation. If no switch is installed to provide a closed circuit, a jumper is required to connect J1 Pins A and B.

The Will-Burt Company also offers optional Input Power Cable Pigtails (Section 3.5.3.3) which have a Power Cable Connector with pre-wired flying leads of predetermined lengths to simplify the wiring process.

The mast does not have a master power switch. If a master power switch is desired, the customer must provide it with the source power.

An Emergency Stop Switch Kit (P/N: 4792701) (Figure 5-10) is supplied with each mast. This kit includes a panel mounted push-pull E-Stop switch, and a legend plate. The emergency stop shall be installed in a position reachable by the operator when operating the mast with the mast controls. This Emergency Stop Switch Kit must be used for CE compliance.

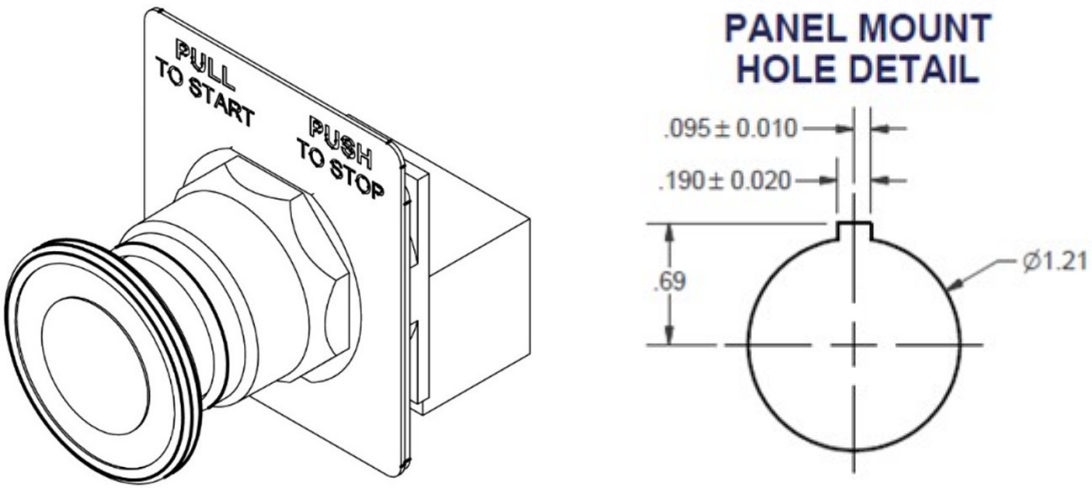

Figure 5-10 Emergency Stop Switch Kit

To connect customer power to the mast system:

1. Wire the Power Cable Connector and Emergency Stop Switch according to Figure 5-11.

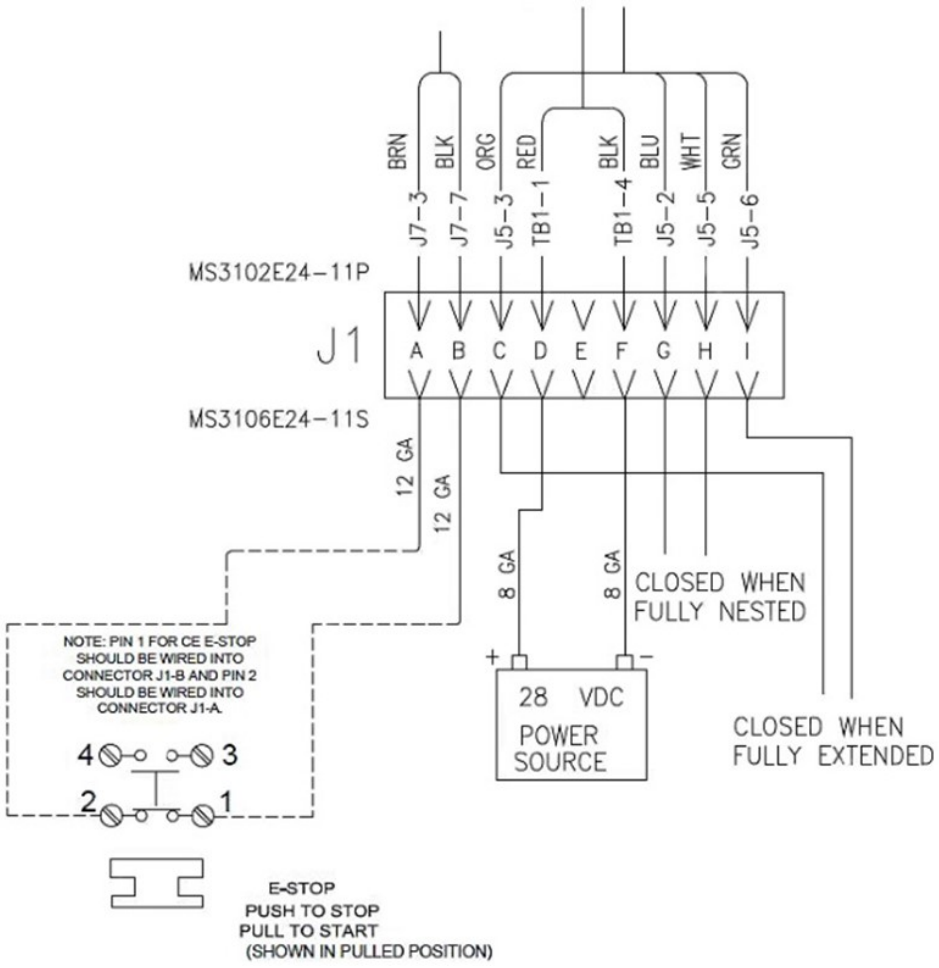

Figure 5-11 Power Cable Connector Wiring

2. Plug customer power into J1 on the Control Box. Screw the connector in place so that the cable is secure.

5.7 Additional Accessory Installation

Depending on the configuration of the mast system, optional components selected, or the installation environment, additional accessories such as PC Interface, Capacitor Bank, or positioners may need to be installed. Install any additional accessories as appropriate.

General installation procedures to keep in mind when installing optional accessories include:

- Use connector J4 on the Control Box to connect the following optional components:
    - D-TEC
    - Hand-Held Remote Control (HHRC)
    - PC Interface

  Note: The Will-Burt Company offers an adapter Y-Cable to allow for the use of both the PC Interface and an HHRC.

5.8 Test the Installation

Follow all precautions while testing the mast system installation.

To test the installation:

1. Review the Pre-Operation Check (Section 6.1).
2. Prepare the mast system for operation.
3. Extend the mast.
4. Lower the mast.

See Section 6 for additional details on these procedures.

5.9 Install Payload

The exact installation procedures for payload will vary based on the customer-specific payload and any adapter being used. For optimal performance, center the payload as best as possible. If the payload will be offset a significant amount, contact The Will-Burt Company. Contact The Will-Burt Company with any questions before performing any installation procedures

In general, to install the payload:

1. Ensure power is removed from the mast system while installing the payload to eliminate the possibility of inadvertent mast extension.

2. Carefully move the payload into position.

3. Properly secure the payload to the mast with customer-provided 1/4-20 high strength hardware. Choose the appropriate length of screw in order to allow maximum thread engagement with the threaded inserts. The standard Payload Interface has six 1/4-20 UNC 2b ↧0.43 (11 mm) holes (Figure 5-12). If required, the Ø0.22 (5.6 mm) ↧ 0.375 (9.5 mm) hole may be used for orientation. The mounting hardware must include proper means to resist vibration loosening such as thread-locking compound and/or locking hardware. Torque all hardware as appropriate for its size and grade.

   The six through holes on the side of the payload mount can be used for additional 1/4-inch bolts, quick release pins or a tether for additional payload security. These holes are oriented 30° from the bolt pattern on the top of the payload mount and are at a height of 0.25 inches below the top payload mount surface. Please contact The Will-Burt Company's Engineering team to determine if your application requires these precautions.

   Note: The Payload Interface has stainless steel inserts. When using stainless steel hardware, use an anti-seize to prevent galling. Use vibration locking methods that do not rely on thread locking compound when using anti-seize.

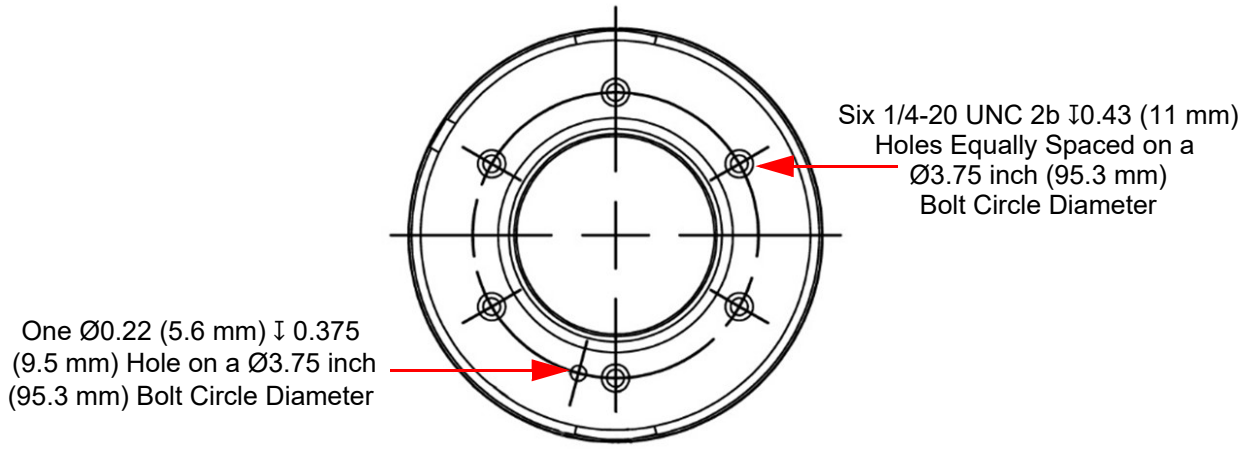

Figure 5-12 Mounting Hole Pattern (4-Meter Stiletto P/N: 711290461 Shown)

Contact the factory for alternatives to the depicted interface.

This page intentionally left blank.

6 Operation

This section describes the operation of the mast system. The exact operating procedures will vary based on the configuration of your mast system. Follow the appropriate operation procedures for your mast system. This section assumes the mast is not guyed. See Section 10.2 for information pertaining to guying of the mast. Be sure to read and understand the entire operation procedure and the Safety Summary (Section 1) before beginning operation.

6.1 Pre-Operation Check

Before operating the system, ensure:

- All operators read and understand the entire operation procedure.
- The mast system is properly installed and undamaged.
- The payload is properly installed. The payload should be bolted to the mast using the six 1/4-20 UNC threaded holes in the top of the top tube ring with high strength bolts and the appropriate thread locker. The six through holes on the side can be used for additional bolts, quick release pins or a tether for additional payload security. Please contact The Will-Burt Company's Engineering team to determine if your application requires these precautions.
- The mast system is undamaged. If damage is apparent, do not use the mast system, and have it serviced prior to use.
- All electrical cables are undamaged and properly terminated.
- All payload cables are not tangled and are free to pay out as the mast extends.
- Any transit tie-downs on the payload have been removed.
- The area is free of power lines or other overhead obstructions. The mast system location should be no closer than a horizontal distance equal to the extended height of the mast away from power lines.
- When using a vehicle, that the vehicle is not moving and is on level terrain. The mast can be operated on terrain having a slope up to:
    - 10° for models up to 10-Meter
    - 5° for models above 10-Meter
- The mast system area is free of personnel.
- The operator has full view of the mast system during use.

6.2 Operation Equipment

Table 6-1 lists recommended equipment for operation.

Table 6-1 Equipment Recommended for Operation

Recommended Equipment *		
Safety Glasses	Work Gloves	Nitrile or Vinyl Gloves
Hard Hat or Helmet	Hearing Protection	Safety Shoes
Crank Handle Assembly (P/N: A3209918) (For manual operation only)		
* Depending on the local, regional, and national standards and codes of practice, and the environment, additional personal protective equipment may be necessary.		

6.3 Controls

The mast system can be operated with the:

- Control Box (Powered Operation) (Section 6.4)
- PC Interface (Powered Operation) (Section 6.5)
- Crank Handle Assembly (Manual Operation) (Section 6.6)

6.3.1 Control Box (Powered Operation)

Controlling the mast system with the Control Box allows for:

- Extending the mast
- Retracting the mast
- Nesting the mast
- Stopping the mast
- Moving the mast to a specific height (manual stop once target height is reached)
- Monitoring the mast parameters and limit switch inputs in real-time (issued error codes)
- Viewing the cycle count

6.3.2 PC Interface (Powered Operation)

The optional PC Interface allows for:

- Extending the mast
- Retracting the mast
- Nesting the mast
- Stopping the mast
- Moving the mast to a specific height
- Monitoring the mast parameters and limit switch inputs in real-time
- Enabling Blackout mode
- Viewing the cycle count

6.3.3 Crank Handle Assembly (Manual Operation)

The Crank Handle Assembly allows for:

- Extending the mast
- Retracting the mast
- Nesting the mast

6.4 Control Box Operation

This section describes operation of the mast system using the Control Box.

If an emergency stop is required at any time, release the UP/DOWN Switch or press the emergency stop button. This will cause the mast to stop extending or retracting.

6.4.1 Prepare the System for Powered Operation

To prepare the mast system for powered operation:

- Ensure the mast system is stationary on level, stable ground
- Perform the Pre-Operation Check (Section 6.1)
- If necessary, remove any transit tie-downs
- If necessary, secure any cables to the mast
- If necessary, secure the payload to the mast (Section 5.9)
- If necessary, reset the emergency stop
- If necessary, turn on the optional (customer supplied) master power switch to supply power to the mast system. The Control Box will scroll the “STILETTO …” message and then display, NESTED, DEPLOYED, an intermediate height, or an error code as appropriate.

The mast system is now operational.

6.4.2 Extend the Mast with UP/DOWN Switch

To extend the mast with the UP/DOWN Switch:

1. Push back the switch guard covering the UP/DOWN Switch.

2. Hold the UP/DOWN Switch in the up position (Figure 6-1). As long as the UP/DOWN Switch is held in the up position, the mast will extend and the display will show the appropriate intermediate extension height. Be sure to stay clear of the collars during operation as they create a pinch point hazard.

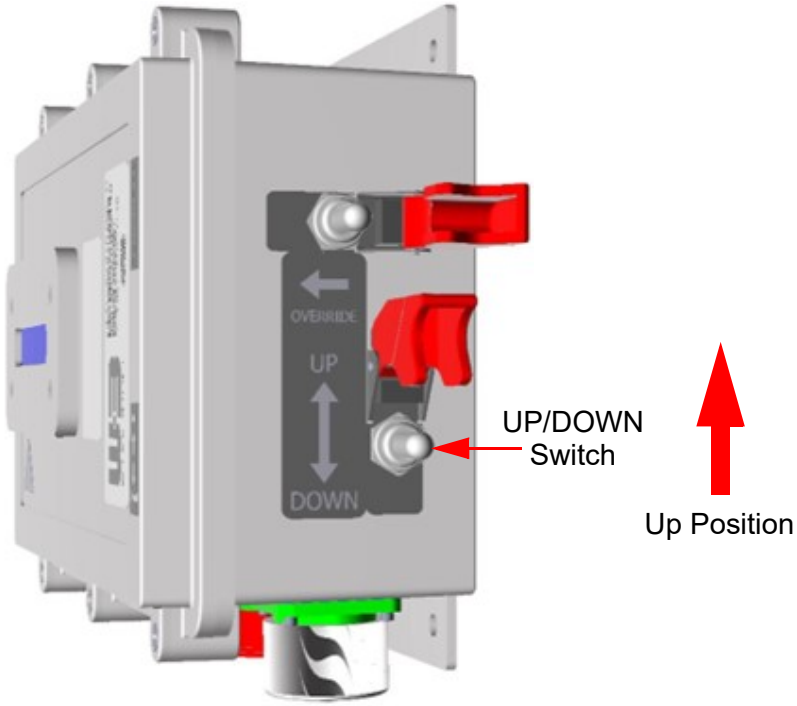

Figure 6-1 UP/DOWN Switch Up Position

3. Release the UP/DOWN Switch when the desired height is reached.

   If the UP/DOWN Switch is released before the maximum extension is reached, the mast will quickly stop and the display will show the current extension.

   If the UP/DOWN Switch is held long enough, the mast will automatically stop when the Full Extension Limit Switch is reached and the display will show “DEPLOYED”.

4. Push the switch guard back into position to protect the UP/DOWN Switch.

6.4.3 Retract the Mast with UP/DOWN Switch

To retract the mast with the UP/DOWN Switch:

1. Push back the switch guard covering the UP/DOWN Switch.

2. Hold the UP/DOWN Switch in the down position (Figure 6-2). As long as the UP/DOWN Switch is held in the down position, the mast will retract and the display will show the appropriate intermediate extension height. Be sure to stay clear of the collars during operation as they create a pinch point hazard.

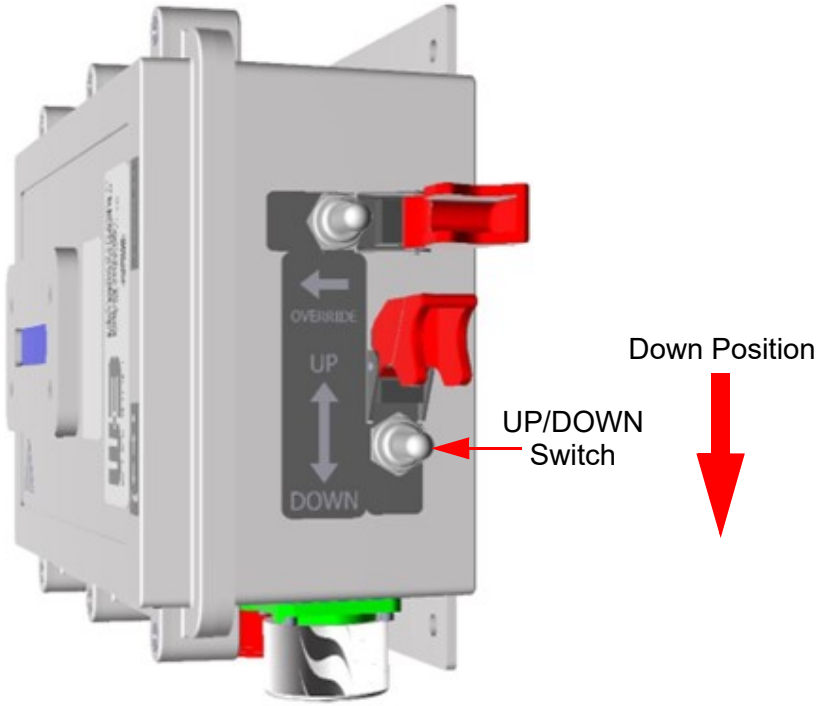

Figure 6-2 UP/DOWN Switch Down Position

3. Release the UP/DOWN Switch when the desired height is reached.

   If the UP/DOWN Switch is released before the Nested position is reached, the mast will quickly stop and the display will show the current extension.

   If the UP/DOWN Switch is held long enough, the mast will automatically stop when the Full Nested Limit Switch is reached and the display will show “NESTED”.

6.4.4 Retract the Mast with OVERRIDE Switch (Emergency Operation)

The OVERRIDE Switch is used with the UP/DOWN Switch to ignore any errors returned by the Control Box in order to retract the mast. Use the OVERRIDE Switch only for emergency operation of the mast.

When using the OVERRIDE Switch to retract the mast:

1. Push back the switch guards covering the OVERRIDE Switch and the UP/DOWN Switch.

2. Hold the OVERRIDE Switch in the engage position and hold the UP/DOWN Switch in the down position (Figure 6-3). As long as both switches are held, the mast will retract and the display will show the appropriate intermediate extension height. Be sure to stay clear of the collars during operation as they create a pinch point hazard.

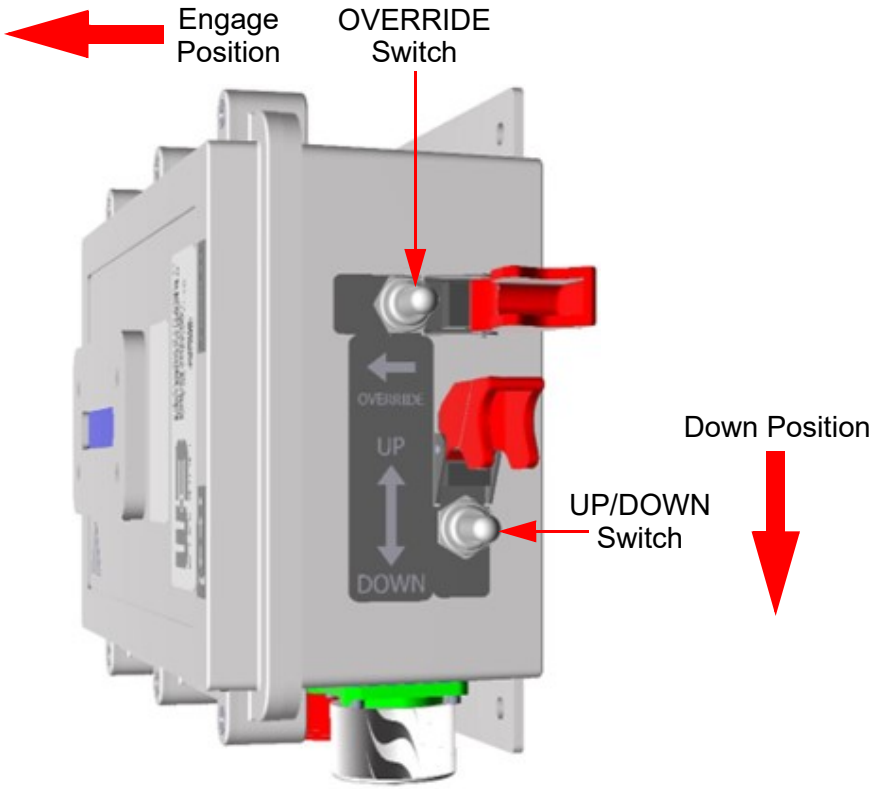

Figure 6-3 OVERRIDE Switch Engage Position and UP/DOWN Switch Down Position

3. Release the UP/DOWN Switch and OVERRIDE Switch when the desired height is reached.

4. Push both switch guards back into position to protect the UP/DOWN and OVERRIDE Switches.

6.4.5 Access the Cycle Count and Temperature with UP/DOWN Switch

The cycle count and temperature:

- Can only be accessed using the Control Box or PC Interface.
- Cannot be accessed during manual operation

To access the cycle count and temperature:

1. Ensure the mast is nested and the UP/DOWN Switch is released.

2. Hold the UP/DOWN Switch in the down position. The cycle count and temperature inside the Control Box will alternately show on the display.

Note: The cycle count drives periodic maintenance procedures. The cycle counter increments every time the DOWN Limit Switch is released and then made again. This will occur anytime the mast is raised approximately one inch or more and lowered to the fully retracted position.

The cycle count only updates when using the Control Box or PC Interface. Manually operating the mast will not adjust the cycle count.

6.5 PC Interface Operation

For information on operation using the PC Interface, contact The Will-Burt Company.

6.6 Crank Handle Operation

This section describes operation of the Mast System using the Crank Handle Assembly.

Note: When not in use, store the Crank Handle Assembly in an accessible area in close proximity to the mast.

Use manual operation for emergency situations only. The normal limit switches and software limits are not in effect during manual operation. There are mechanical hard stops just beyond both the upper and lower limit switch locations that will stop the mast safety, however, it is good practice to stop the mast at the normal positions.

Note: When manually operating the mast, the intermediate height on the Control Box will not change.

6.6.1 Prepare the System for Manual Operation

To prepare the mast system for manual operation:

- Ensure the mast system is stationary on level, stable ground
- Perform the Pre-Operation Check (Section 6.1)
- Ensure power is removed from the mast system. Do not manually operate the mast system with power to the mast system.
- Retrieve the Crank Handle Assembly from its storage location.

The mast system is now operational.

6.6.2 Extend and Retract the Mast with Crank Handle Assembly

When power is removed from the mast system, friction in the drive system supports the mast tube and payload weight. Be sure the mast tubes stop moving before removing the hand crank from the mast override shaft after manual operation as the dynamic braking of the motor is unavailable.

To extend/retract the mast manually:

1. Ensure the mast is not powered. Do not access the Manual Override until power has been removed from the mast system.

2. Locate the Manual Override Shaft (Figure 6-4).



Figure 6-4 Manual Override

3. Remove the dust cap to expose the Manual Override.

4. Insert the Crank Handle Assembly.

5. Use the Crank Handle Assembly to:

   - Extend the mast by turning the Crank Handle Assembly clockwise
   - Retract the mast by turning the Crank Handle Assembly counterclockwise.

   Be sure to stay clear of the collars during operation as they create a pinch point hazard.

6. When the mast has reached the desired height and the tubes are not moving, remove the Crank Handle Assembly. Secure the dust cap in place to protect the Manual Override from dust, sand, and moisture intrusion.

   Note: The mast will hit a hard stop when completely extended or completely retracted as the normal limit switches will not function without power. The best practice is to stop just before these hard stops are reached.

7. Store the Crank Handle Assembly in an accessible area in close proximity to the mast.

The manual input point can normally only be accessed from above. The Will-Burt Company offers an optional 90° gear box variant which bolts onto the manual input point and provides an identical ½ inch square interface to the hand crank. This variant can be oriented either to the side or to the rear per customer instruction. The operation is identical to hand crank operation. The 90° gear drive should only be used for manual extension and retraction in the event of an electrical power loss. Damage to the 90° gear drive could result from trying to input too much torque by hand, such as breaking through ice, or other similar high torque applications. Consult The Will-Burt Company for more information for this optional equipment.

6.7 Special Instructions for Clearing Heavy Ice Buildup

During periods of heavy precipitation and high ice buildup on the mast there is a chance of jamming during retraction of a deployed mast. This high ice buildup on the collar sections (horizontal surfaces) of the mast could cause the tube lock mechanisms to become “out of time” and cause internal damage. This ice buildup must be cleared away during retraction just before the individual tube and collars contact each other. Refer to (Figure 6-5) for areas to clear the ice away from the tubes and collars prior to nesting.

The order of operations concerning the ice removal is as follows:

Note: Only retract the mast with electrical power, do not attempt to use the manual crank input. Internal damage may occur using the manual crank during high torque applications.

1. Attempt to retract the mast with electrical power only. If the mast begins to break the ice on its own, proceed to Step 4. If the mast stalls and does not retract then proceed to Step 2. Do not continue to labor the motor with a stalled tube set as this could cause premature wear on the mast.

2. Begin clearing away the ice on horizontal surfaces (collar) closest to the operator. Utilizing non-piercing tools, begin by breaking the ice bond and using a striking motion away from the tube (tangent to the tube). Continue to do this ice clearing around the collar. Then remove the remaining ice from the vertical lock post on the collar. Next, begin to remove the ice buildup on the “nesting” tube. Use extreme caution when removing ice from the circumference of the tube, only 1-2 vertical inches of ice will need to be removed. Use a tangential clearing motion to keep from piercing the tube. Proceed to Step 3.

3. Attempt to retract the mast electrically again. If the tube set is still stalled and will not retract, then ice has built up internally and the unit will need to be thawed in order to regain functionality. Do not continue to labor the motor with a stalled tube set. If the mast does retract, proceed to Step 4.

4. Continue to retract the tube until it is a few inches from nesting and contacting the lower collar. Begin clearing away the ice on horizontal surfaces (collar) closest to the operator. Utilizing non-piercing tools, begin by breaking the ice bond and using a striking motion away from the tube (tangent to the tube). Continue to do this ice clearing around the collar. Next, remove the remaining ice from the vertical lock post on the collar. Operate the mast until the collars make contact and the next tube begins to retract. At this point repeat Steps 1 and 4.

5. If the mast continues to break ice during retraction but experiences trouble only near a locking transition, then ice has frozen inside the lock body. This ice in the lock body is interfering with the normal unlocking of the interfaces. To clear the ice, use a small, hard tool to reach inside the opening at the bottom of the housing. Manually chip and clear the ice from the internal parts, then set the latch to the proper “Locked” orientation, as illustrated in (Figure 6-6). Attempt to retract the mast again under electrical power.

6. Repeat steps until the mast is nested:

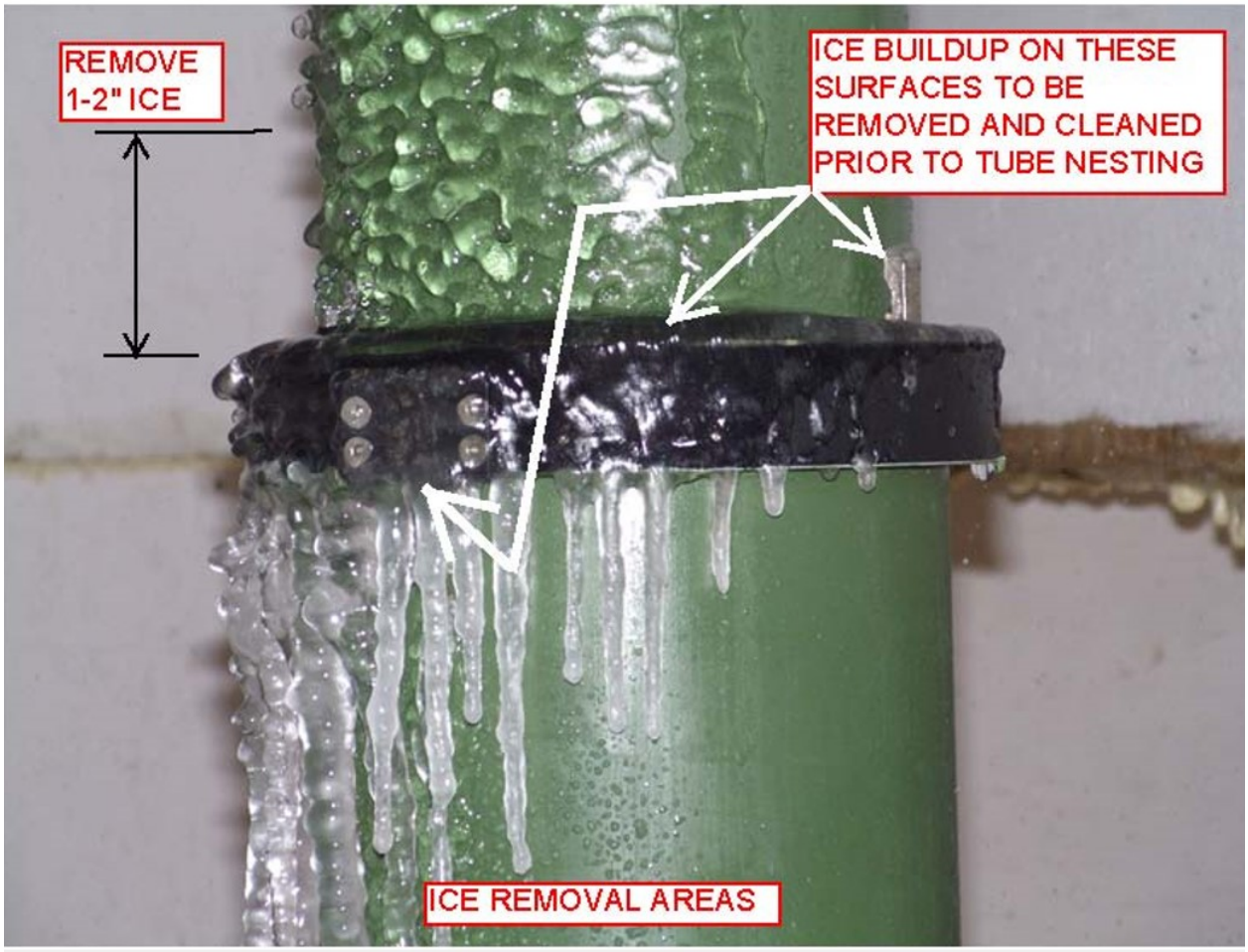

Figure 6-5 Ice Removal Areas

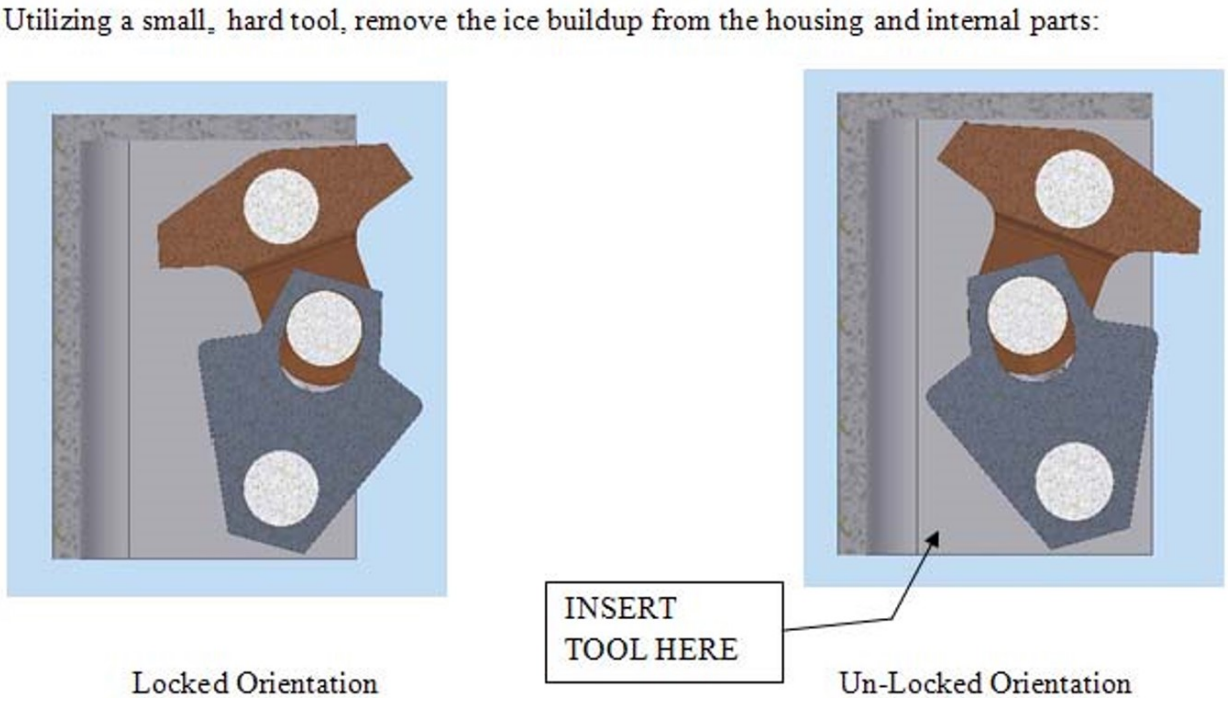

Figure 6-6 Lock Housing Ice Removal

7. Once the internal ice is cleared away, observe the orientation of the lock mechanism. If it is witnessed to be in the “Un-locked” position, then push on the rocker to trip it back to the “Locked” position. When the mast operator has clear access to the internal parts of the lock housing, the orientation should only be “Locked.” Under no circumstance should the locks be simultaneously set in the “Un-locked” orientation, while the mast is being operated.

This page intentionally left blank.

7 Transportation

Before transporting the mast system, the mast system needs to be secured. The exact procedures for transportation will vary based on the mast system configuration. The process described in this manual represents a possible method of transporting the mast. Depending on the environment and equipment available, other methods may work better. Use the best and safest method for your circumstances.

7.1 General Transportation

To prepare the mast system for transportation:

1. Ensure the mast is fully nested. Do not transport the mast system with the mast and payload extended. Always visually confirm the mast is fully retracted before moving the mast. Please contact The Will-Burt Company's Engineering team for special circumstances for transportation without the mast nested for military use only.

2. The vehicle interlock circuit should confirm the mast is nested and disconnect power to the unit before moving the vehicle.

3. If used, ensure the optional (customer supplied) master power switch is off to eliminate the possibility of inadvertent mast extension.

4. Ensure the payload is removed, supported, or otherwise isolated from the top tube to prevent damage to the mast and payload. Consult The Will-Burt Company's Engineering team for applications where the payload is not removed or supported.

5. If necessary, secure any additional components in the mast system.

Note: The operator should always visually confirm the mast is entirely retracted before moving the vehicle.

7.2 Shipping

When shipping the mast system, The Will-Burt Company recommends shipping the mast bolted down in the original shipping crate. If the original shipping crate is not available, contact The Will-Burt Company to order a replacement.

When shipping:

1. As necessary, remove the payload.
2. As necessary, prepare the mast system for transportation (Section 7.1).
3. As necessary, uninstall the mast system from the mounting structure (Section 5.6).
4. Secure the mast system in the shipping crate:
    a. Carefully position the mast in the crate.
    b. Secure the block at the top of the mast to prevent the mast from shifting in the shipping crate during transportation.
    c. Secure the top half of the wooden mast saddles.
    d. As necessary, carefully pack any additional components in the shipping crate.
    e. Secure the lid on the shipping crate.

8 Maintenance

This section describes maintenance procedures required to keep the system operational. Be sure to read and understand the entire operation procedure and the Safety Summary (Section 1) before beginning any maintenance or adjustment procedure.

Disconnect power to the mast system and any devices mounted to the mast with lock out tag out procedures as appropriate before performing mast maintenance. The J1 connector on the Control Box can be removed to isolate power to the mast and control box. Be sure source power is removed before removing the J1 connector.

8.1 Pre-Maintenance Check

Before performing maintenance procedures, ensure:

- All operators read and understand the entire maintenance procedure and are properly trained.
- The payload is removed prior to performing maintenance on the system.
- The system is level and secure.

8.2 Maintenance Equipment

Table 8-1 lists recommended equipment for maintenance.

Table 8-1 Recommended Maintenance Tools & Materials

Tools and Materials		
Safety Glasses	Work Gloves	Safety Shoes
Hard Hat or Helmet	Hearing Protection	Nitrile or Vinyl Gloves
Wrenches	Wire Brush	Paint Brushes
Torque Wrench	Screwdrivers	Sling
Grease Gun	Hoist	Touchup Paint
Drive Screw Lubricant		Denatured Alcohol or Other Solvent
Rags (Soft, Clean, and Dry)		Non-Abrasive Cleaners (Soap and Water)
Note: • Depending on the local, regional, and national standards and codes of practice, and the environment, additional personal protective equipment may be necessary. • When disposing of any disposables or components, do so according to any applicable local, regional, and national standards and codes of practice.		

8.3 Spare Parts

To order spare or replacement parts, always refer to the mast model number and serial number. The model number, serial number, and additional information is engraved on the mast Identification Plate (Figure 3-8). Throughout this manual, “P/N” followed by a number represent the part number for that component. To order spare parts, or for the part numbers for additional components, contact The Will-Burt Company.

8.4 Preventative Maintenance Checks and Services (PMCS)

This section describes the systematic care and inspection of equipment to keep it in safe operating condition and to prevent breakdowns. If the mast system does not perform as required, see Section 9 for troubleshooting. If anything looks wrong and cannot be diagnosed and/or fixed, contact The Will-Burt Company. The Will-Burt Company recommends creating and maintaining a maintenance log for each mast system.

8.4.1 Schedule

Table 8-2 provides a schedule of preventative maintenance inspections and procedures required to keep the mast system in good operating condition.

Table 8-2 Preventative Maintenance Schedule

Frequency	Inspection	Action
As Needed; In salt water or sandy environments, clean the mast every 3 months.	**Keep Clean** – Inspect to ensure the mast system is kept clean and free from foreign material. Dirt, grease, oil, sand and debris may cover up a serious problem.	Clean as you work and as needed. Use denatured alcohol on all metal surfaces. Use water when cleaning rubber or plastic material. Use soap and water when cleaning the exterior surfaces of the mast tubes. Use a soft, non-abrasive cloth to wipe clean the bezel on the Control Box display.
During Operation	**Damage** – Inspect for damage before use. During extension and retraction of the mast, inspect the outer surfaces for damage.	If damage is apparent, do not use the mast system, and have it serviced prior to use.
During Operation	**Binding** – During extension and retraction of the mast, observe mast operation for evidence of binding.	Remove any foreign material or obstructions as necessary. Do not use if the mast is extending or retracting erratically.
Weekly	**Damage** – Inspect all visible surfaces for damage.	If damage is apparent, do not use the mast system and have it serviced before use.

Table 8-2 Preventative Maintenance Schedule (Continued)

Frequency	Inspection	Action
Weekly	**Finish** – Inspect the condition of the mast finish. Look for bare metal, rust, and corrosion.	Remove any rust or corrosion with a wire brush. Touchup any bare metal with touchup paint.
Weekly	**Fasteners** – Inspect external fasteners. Look for loose, missing, bent, or broken fasteners. Look for chipped paint, bare metal, or rust around the bolt heads. Pay particular attention to the fastener securing the mast system to the mounting surface, the mast to the drive assembly, the motor to the drive assembly, and the payload to the mast.	Replace any missing or damaged hardware. If any hardware is found loose, retighten. If loose fasteners joining major components cannot be tightened, do not use the mast system and have it serviced before use.
Weekly	**Mast Cables** – Inspect mast system cables. Look for cracked, frayed, or broken insulation; bare wires; loose or broken connectors. Ensure the cables and bulkhead connectors are clean, the pins undamaged, and the threads in good condition.	Replace cables as required. Tighten loose connections. If the bulkhead connectors are unable to mate with the corresponding cable, do not use the mast system and have it serviced before use.
Weekly	**Payload Cables** – Inspect any cables going up to the payload for signs of pinching between the collars or spearing by the trigger posts.	Replace cables as required.
Weekly	**Cycle Counter** – Check to ensure Cycle Counter is operating properly by noting that during initial cycle of the mast the cycle counter increases by one. Refer to Section 6.4.5 for cycle counter operation.	
50 – 100 Cycles or as Required	**Corrosive Environment** – When the mast system is in a corrosive environment, inspect for damage and lubricate the mast. See Section 8.4.3.	
250 Cycles	**Lubricate** – Lubricate the Drive Screw. See Section 8.4.2.	
2,500 Cycles	**Extension Nuts** – Replace the extension nuts.	Replacing the extension nuts requires special training due to potential collapse hazard. Contact The Will-Burt Company for details about factory training and/or factory rebuild.
5,000 Cycles (or 7 Years)	**Overhaul** – Return for complete factory overhaul and rebuild.	

8.4.2 Lubricate the Drive Screw

This section describes how to lubricate the Drive Screw. The Drive Screw should be lubricated every 250 cycles.

Lubricate the Drive Screw as follows:

1. Charge the grease gun that shipped with the mast system with a cartridge of Drive Screw Lubricant. Drive Screw Lubricant can be ordered separately from The Will-Burt Company.

2. Fully extend the mast.

3. Remove the hex-shaped access plug from the grease port on the side of the base tube (Figure 8-1).

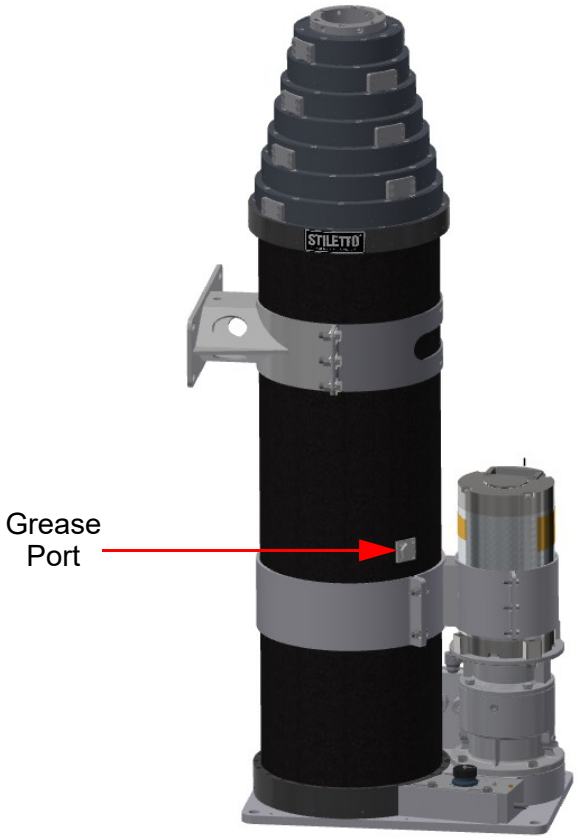

Figure 8-1 Grease Port

4. Remove the hydraulic coupling (cap) from the output tube of the grease gun.

5. Prime the grease gun by pumping the handle a few times until grease is seen to exit the tube.

6. Insert the tube through the access holes to touch the Drive Screw directly.

7. Apply a generous dab of grease (two strokes of the handle or approximately 1/14 of the cartridge) onto the Drive Screw.

8. Jog the mast about ¾ inch (19 mm) (one half revolution of the Drive Screw) and apply another generous dab (two strokes of the handle or approximately 1/14 of the cartridge). It is not necessary to use an entire cartridge of grease during a single maintenance procedure. The cartridge should last for seven greasing operations.

9. Replace the access plug into the access plate. Screw the hydraulic coupling (cap) back onto the output tube of the grease gun.

10. Retract the mast completely, extend it completely and retract it completely to distribute the grease over all the extension nuts and the complete Drive Screw.

11. Record the date, cycle count, and procedure in the mast's maintenance record.

8.4.3 Corrosive Environments

This section describes procedures to be done when the mast system is in a corrosive environment. These procedures should be done every 50 to 100 cycles or as needed. Follow all precautions while maintaining the Stiletto. Contact The Will-Burt Company with any questions before performing any procedure outlined in this document.

Required Tools and Materials include:

- Assorted Hand Tools sized for metric fasteners
- Pressurized Air

Inspect and repair as follows:

1. With the mast nested, visually inspect all fasteners. Replace any damaged, corroded, or pitted fasteners.

2. With the mast nested, visually inspect all cables and connectors. Replace any damaged, corroded, or pitted cables and connectors.

3. Inspect for rust and corrosion. While extending and retracting the mast tubes, inspect for rust and corrosion on the mast tubes. Remove any rust or corrosion with a wire brush. Touchup any bare metal with touchup paint or Alodine (chemical conversion coating) where appropriate.

8.4.4 Mast Damage

If damage to the mast occurs, do not use the mast system and have it serviced before use. Servicing the mast system may require removal of the mast system. If the mast system is installed on a vehicle, consult the vehicle manual for specific installation details.

In general, remove the mast system as follows:

1. Disconnect power from the mast system.
2. Disconnect the power cable from J1 on the Control Box.
3. Disconnect mast sensor cable from J2 on the Control Box and J6 on the mast.
4. Disconnect the motor cable from J3 on the Control Box and J5 on the mast.
5. Disconnect any data cable from J4 on the Control Box.
6. Remove the support bracket assembly.
7. Remove the mounting hardware from the base of the mast.

8.5 Long-Term Storage

This section describes the best practice for long-term storage (longer than one month) of the mast system.

When putting the system into long-term storage, ensure the:

- Mast is fully nested
- Payload is removed
- Mast system is clean. Dirt, grease, oil, and debris only serves to collect additional dirt during storage. Use denatured alcohol on all metal surfaces. Use water when cleaning rubber or plastic material. Use soap and water when cleaning the exterior surfaces of the mast tubes. Use a soft, non-abrasive cloth to wipe clean the bezel on the Control Box display.
- Inspect the condition of the mast finish. Look for bare metal, rust, and corrosion.
- Inspect external fasteners. Look for loose, missing, bent, or broken fasteners. Look for chipped paint, bare metal, or rust around the bolt heads. Pay particular attention to the fastener securing the mast system to the mounting surface, the mast to the drive assembly, the motor to the drive assembly, and the payload to the mast.
- Inspect mast system cables. Look for cracked, frayed, or broken insulation; bare wires; and loose or broken connectors. Ensure the cables and bulkhead connectors are clean, the pins undamaged, and the threads in good condition.

Once the mast system has been inspected and repaired, it should be stored:

- In a clean and dry indoor environment
- Out of direct sunlight
- In the shipping crate. If necessary, replacement shipping crates may be ordered.
- Between 0°C to 32°C (32°F to 90°F)

If the mast system is stored for a period of time greater than five years, the mast is to be inspected by a factory-trained technician before operation.

8.6 System Disposal

Dispose of the mast and components in accordance with the national environmental regulations.

This page intentionally left blank.

9 Troubleshooting

This section describes system troubleshooting information. Please contact The Will-Burt Company if these guides do not solve the issue. Be sure to read and understand the entire operation procedure and the Safety Summary (Section 1) before beginning any maintenance or troubleshooting procedure.

9.1 Error Conditions

Table 9-1 shows many of the more probable error conditions. Where multiple probable causes can explain an error condition, they are listed in order of probability from highest to lowest. It should be noted that some “errors” are more aptly called “states” and do not necessarily indicate improper operation.

Table 9-1 Troubleshooting Error Conditions

Problem	Possible Cause	Possible Solution
Precondition Contact Closure Condition Provisions have been made for a precondition contact “handshake” circuit. If the circuit is open, the operation of the mast is prevented and the software revision level is shown on the Display. This feature is normally disabled by a jumper installed across the contacts (J1 Pins A,B). The primary application of this capability is a sensor on a hatch above the mast. Correcting the condition will clear this error.		
	Precondition is not present (i.e. the hatch is closed).	Establish the proper precondition (i.e. open the hatch).
	Damaged/inoperative pre-condition switch.	Check the switch for continuity and replace if necessary.
	Missing connector wire (no handshaking used). (There is not hatch.)	Refer to the wiring schematic (Figure 5-9) for the Control Box, and replace the jumper between the two appropriate contacts.
	Malfunctioning mast control.	Contact an authorized service center for evaluation and possible return for repair.

Table 9-1 Troubleshooting Error Conditions (Continued)

Problem	Possible Cause	Possible Solution
The mast has stopped moving upward, or is moving very slowly.		
	Interference to the mast.	Inspect for and remove obstructions or tangled payload cables, or lighten the payload.
	Damaged Motor Cable.	Disconnect the Motor Cable from the mast. Inspect the cable for continuity and shorts. Replace faulty cable.
	Damaged or inoperative Motor.	Replace the Motor
	Malfunctioning Control Box.	Contact authorized service center for evaluation and possible return for repair.
	Extension Nuts fail to synchronize with Drive Screw.	1. Try retracting the mast 76 mm (3 inches) and approach that region again. If this does not work, the Extension Nuts may be worn out and will need to be replaced. 2. Try raising the mast with the Crank Handle Assembly. There may be a burr on the Extension Nut and action with the Crank Handle Assembly, which is not limited by the torque limits of the Motor, may power through it. Do not apply in excess of 50 lb.-ft. (68 N-m) when using the Crank Handle Assembly. If this does not work, the Extension Nuts may be worn out and will need to be replaced.

Table 9-1 Troubleshooting Error Conditions (Continued)

Problem	Possible Cause	Possible Solution
The mast has stopped moving downward		
	Damaged Motor Cable.	Disconnect the Motor Cable from the mast. Inspect the cable for continuity and shorts. Replace faulty cable.
	Misadjusted slip clutch or damaged or inoperative Motor.	The slip clutch may need adjusted (consult The Will-Burt Company's customer service team); Replace the Motor.
	Malfunctioning Control Box.	Contact authorized service center for evaluation and possible return for repair.
	Extension Nuts fail to synchronize with Drive Screw.	1. Try raising the mast 76 mm (3 inches) and approach that region again. If this does not work, the Extension Nuts may be worn out and will need to be replaced. 2. Try lowering the mast with the Crank Handle Assembly. There may be a burr on the Extension Nut and action with the Crank Assembly, which is not limited by the torque limits of the Motor, may power through it. If this does not work, the Extension Nuts may be worn out and will need to be replaced.
Nothing works and the display does not light.		
	Power to the mast is interrupted at the shelter or vehicle level.	Refer to shelter or vehicle level maintenance procedures.
	The Control Box Circuit Breaker is tripped.	The internal circuit breaker in the Control Box is an auto-resettable thermal breaker which will reset once it cools. The circuit breaker tripping is an indication that the mast is pulling higher amperage than anticipated and this should be investigated before trying to further run the mast.

For additional information, please contact The Will-Burt Company's Customer Service at +1 330 684 4000.

9.2 Error (Fault) and Warning Codes

This section describes error (fault) codes and warning codes. Error (fault) Codes and Warning Codes will display on the Control Box. If Stiletto Control Remote Access Management (SCRAM) (Section 10.3) is used, they will also appear on the SCRAM GUI.

If multiple errors occur, the Control Box will display combined error codes.

For example:

- If error 0001 and error 0010 both occur, the error will display as 0011
- If error 0100 and error 0200 both occur, the error will display as 0300

The same principle should hold true for warnings. When errors and warnings both occur, only the errors will show until the errors are cleared.

9.2.1 Error (Fault) Codes

Table 9-2 shows error (fault) codes that may appear on the Control Box Display. Re-occurrence of error codes is possible if trigger conditions are met.

Table 9-2 Error (Fault) Codes

Error Code	Trigger Condition	System Response	Latch Until	Possible Causes
0001	System voltage drops below 17 VDC for 5 consecutive seconds	**Excessive Low Volts Fault (ERR 0001):** Disable all normal output functions. If the OVERRIDE Switch is activated while this fault is active, re-enable all outputs. **CAUTION:** Avoid unnecessary attempts to operate the mast at excessive low voltage levels to prevent system damage. **NOTICE:** Even though outputs are enabled, the mast may not be able to move due to the low system voltage.	• System is above 18 volts and no Up/ Down inputs are active - or - • System power is cycled and is above 18 volts	• Excessive battery drain without sufficient charge current/ time • Excessive Motor current due to mast resistance, excessive payload, or drive chain binding • Insufficient power supply • Too long/ undersized power supply line (mains)
0002	Control Box detects 80 Amps for more than 2 seconds	**Excessive Motor Current Fault (ERR 0002):** Disable the Motor Outputs.	• 5 OVERRIDE Switch activations within 3 seconds - or - • System Power is cycled and trigger conditions cleared	• Excessive Motor current due to mast resistance, excessive payload, or drive system binding

Table 9-2 Error (Fault) Codes

Error Code	Trigger Condition	System Response	Latch Until	Possible Causes
0004	Local Up Switch active for excessive time period	**Local Up Switch Stuck Fault (ERR 0004):** Ignore the Local Up input, except when the OVERRIDE Switch is active.	• Local Up Switch is no longer active - or - • System power is cycled and trigger conditions cleared	• Switch is being held on • Switch is damaged • Water ingress may be activating switch input • Cable or connection failure
0008	Remote Up Switch active for excessive time period	**Remote Up Switch Stuck Fault (ERR 0008):** Ignore Remote Up switch, except when the OVERRIDE Switch is active.	• Remote Up Switch is no longer active - or - • System power is cycled and trigger conditions cleared	• Switch is being held on • Switch is damaged • Water ingress may be activating switch input • Cable or connection failure
0010	Local Down Switch active for excessive time period	**Local Down Switch Stuck Fault (ERR 0010):** Ignore the Local Down input, except when the OVERRIDE Switch is active.	• Local Down Switch is no longer active - or - • System power is cycled and trigger conditions cleared	• Switch is being held on • Switch is damaged • Water ingress may be activating switch input • Cable or connection failure

Table 9-2 Error (Fault) Codes

Error Code	Trigger Condition	System Response	Latch Until	Possible Causes
0020	Remote Down Switch active for excessive time period	**Remote Down Switch Stuck Fault (ERR 0020)** Ignore the Remote Down Switch, except when the OVERRIDE Switch is active.	• Remote Down Switch is no longer active - or - • System power is cycled and trigger conditions cleared	• Switch is being held on • Switch is damaged • Water ingress may be activating switch input • Cable or connection failure
0040	From Nested position, Up Switch active for more than 2 seconds with no Down limit switch change	**Down Limit Switch Failed/Stuck Fault (ERR 0040):** Disable the Motor Outputs unless the OVERRIDE Switch is also active. Can occur on combination with ERR 0001 or ERR 0002; indicated as ERR 0041 or ERR 0042	• 5 OVERRIDE Switch activations within 3 seconds - or - • System power is cycled and trigger conditions cleared	• Switch requires adjustment or recalibration • Switch failed and requires replacement • Drive system damaged
0080	From Fully deployed position, Down Switch active for more than 2 seconds with no Up limit switch change	**Up Limit Switch Failed/Stuck Fault (ERR 0080):** Disable the Motor Outputs unless the OVERRIDE Switch is also active. Can occur on combination with ERR 0001 or ERR 0002; indicated as ERR 0081 or ERR 0082.	• 5 OVERRIDE Switch activations within 3 seconds - or - • System power is cycled and trigger conditions cleared	• Switch requires adjustment or recalibration • Switch failed and requires replacement • Drive system damaged

Table 9-2 Error (Fault) Codes

Error Code	Trigger Condition	System Response	Latch Until	Possible Causes
0100	OVERRIDE Switch has been active for an excessive time period	**OVERRIDE Switch Stuck Fault (ERR 0100):** Ignore OVERRIDE Switch input. Note: This fault cannot be overridden.	• OVERRIDE Switch is no longer active - or - • System power is cycled and trigger conditions cleared	• Switch is being held on • Switch is damaged • Water ingress may be activating switch input
0200	Up and Down Limit Switches are active at the same time (not physically possible)	**Conflicting Up/ Down Limit Switch Fault (ERR 0200):** Disable the Motor Outputs unless the Override Switch is also active.	• Either switch is no longer active - or - • System Power is cycled and trigger conditions cleared	• Switch(es) require adjustment or recalibration • Switch(es) failed and require replacement(s) • Cable or connection failure
1000	CAN Output Buffer Overflow	**CAN Output Buffer Overflow (ERR 1000):** CAN bus failure. Check CAN bus connections.	• System Power is cycled and trigger conditions cleared	• CAN Bus cannot be written to as queued information has not been sent.
2000	CAN Input Buffer Overflow	**CAN Input Buffer Overflow (ERR 2000):** CAN bus failure. Check CAN bus connections.	• System power is cycled and trigger conditions cleared	• External source has written CAN buffer and we have not retrieved the data, so currently incoming CAN data cannot be received.

Table 9-2 Error (Fault) Codes

Error Code	Trigger Condition	System Response	Latch Until	Possible Causes
8000	Firmware Error	**User Input Error (ERR 8000):** Refer to product documentation for valid commands.	• 5 OVERRIDE Switch activations within 3 seconds - or - • System power is cycled and trigger conditions cleared	• Erroneous user input in the text user interface during debug mode.
L.S. ERR (Legacy)	Both Limit Switches are seen as active.	**Limit Switch Error:** Disable the Motor Outputs unless the Override Switch is also active.	• Cannot be cleared until the condition causing the error is fixed. Use the OVERRIDE Switch for emergency operation.	• If the mast is nested, a magnet may be near the extended limit switch. • If the mast is extended, a magnet may be near the nested limit switch. • Wiring damage • Connector damage • Switch damage

9.2.2 Warning Codes

Table 9-3 shows warning codes that may appear on the Control Box Display. Re-occurrence of warning codes is possible if trigger conditions are met.

Table 9-3 Warning Codes

Warning Code	Trigger Condition	System Response	Latch Until	Possible Causes
0001	Both Up and Down switches detected simultaneously. (Local and Remote switches conflict)	**Conflicting Mast Up/Mast Down Switch Commands Warning (WRN 0001):** Disable the Motor Outputs unless the OVERRIDE Switch is also active.	• One or both of the conflicting switch inputs are no longer active - or - • System power is cycled and trigger conditions cleared	• One or both Switch(es) are being held on • One or more Switch(es) are damaged • Water ingress may be activating switch input(s) • Cable or connection failure
0002	System voltage has dropped below 20 VDC for 5 consecutive seconds. (Remaining above 18 VDC)	**Low Volts Warning (WRN 0002):** Allow all mast normal functions.	• System voltage reaches 21 VDC for 5 consecutive seconds - or - • System power is cycled and trigger conditions cleared	• Excessive battery drain without sufficient charge current/ time • High Motor current due to mast resistance or large payload

Table 9-3 Warning Codes

Warning Code	Trigger Condition	System Response	Latch Until	Possible Causes
0004	Temperature Sensor reading above 80°C	**High Temperature Warning (WRN 0004):** Allow all normal mast functions.	• Temperature reading is below 78°C - or - • 5 OVERRIDE Switch activations within 3 seconds - or - • System power is cycled and trigger conditions cleared	• High ambient temperature (direct sunlight)
0008	Temperature Sensor reading below -40°C	**Low Temperature Warning (WRN 0008):** Allow all normal mast functions.	• Temperature reading is above -38°C - or - • 5 OVERRIDE Switch activations within 3 seconds - or - • System power is cycled and trigger conditions cleared	• Low ambient temperature

Table 9-3 Warning Codes

Warning Code	Trigger Condition	System Response	Latch Until	Possible Causes
0010	Invalid (or no) response from Temperature Sensor	**Temperature Sensor Failure Warning (WRN 0010):** Allow all normal mast functions	• Valid temperature reading received - or - • 5 OVERRIDE Switch activations within 3 seconds - or - • System power is cycled and trigger conditions cleared	• Temperature Sensor failed and requires replacement • Temperature Sensor Wiring damaged and requires repairs or replacement
0020	Pulses not detected during mast positioning	**Pulse Counter Warning (W0020):** Allow all normal mast functions. **NOTICE:** Mast height readout will be inaccurate.	• Valid pulse count detected • 5 override switch activations within 3 seconds • System power is cycled and trigger conditions cleared	• Pulse counter requires adjustment or recalibration • Pulse counter failed and requires replacement • Pulse counter wiring damaged and requires repairs or replacement

Table 9-3 Warning Codes

Warning Code	Trigger Condition	System Response	Latch Until	Possible Causes
0040 (Legacy)	Extend/Retract movement (50 mm) not detected after 2 seconds of continuous extend/retract command	**String Potentiometer Failure Warning (WRN 0040):** Allow all normal mast functions. **NOTICE:** Mast height readout will be inaccurate.	• Valid signal detected - or - • 5 OVERRIDE Switch activations within 3 seconds - or - • System power is cycled and trigger conditions cleared	• If seen in current control boxes, it likely means the DIP switches in the circuit board are set incorrectly - Legacy - • Potentiometer requires adjustment or recalibration • Potentiometer failed and requires replacement • Potentiometer wiring damaged and requires repairs or replacement

Table 9-3 Warning Codes

Warning Code	Trigger Condition	System Response	Latch Until	Possible Causes
0080 (Legacy)	Extend/Retract movement (50 mm) not detected after 2 seconds of continuous extend/retract command	**Encoder Failure Warning (WRN 0080):** Allow all normal mast functions. **NOTICE:** Mast height readout will be inaccurate.	• Valid signal detected - or - • 5 OVERRIDE Switch activations within 3 seconds - or - • System power is cycled and trigger conditions cleared	• If seen in current control boxes, it likely means the DIP switches in the circuit board are set incorrectly - Legacy - • Encoder requires adjustment or recalibration • Encoder failed and requires replacement • Encoder wiring damaged and requires repairs or replacement

10 Reference

This section provides reference information for the system as follows:

- Extended Glossary of Terms (Section 10.1)
- Guying (Section 10.2)
- Drawings (Section 10.3)

10.1 Extended Glossary of Terms

This section defines terms used within this manual as follows:

10.1.1 General Terms and Abbreviations

This section describes general terms and abbreviations used within this manual.

- **Amp:** stands for ampere which is a unit of electric current.
- **Base Tube:** refers to the tube with the largest diameter. When the mast is fully extended, this is the tube closest to the mounting surface.
- **CD:** stands for coefficient of drag.
- **Collars:** attaches to the top of each tube except the top tube.
- **EMC:** stands for electromagnetic compatibility.
- **EMI:** stands for electromagnetic interference.
- **Extended:** refers to the partial- or full-raised position of the mast that the mast mechanically goes to from the nested position. In the extended position, some or all the tubes have risen.
- **ID:** stands for Inside Diameter or the diameter to the inside edge of a circle.
- **in.-lb.:** stands for inch-pounds, which is a unit of torque equal to the force in pounds multiplied by the distance in inches to the pivot point.
- **Intermediate Tubes:** refers to the tubes between the base tube and the top tube.
- **lb.-ft.:** stands for pounds-feet, which is a unit of torque equal to the force in pounds multiplied by the distance in feet to the pivot point.
- **Mast:** refers to the mechanical telescoping mast.
- **Mast System:** refers to the entire Stiletto mast system (telescoping mast, Control System, and additional accessories).
- **MOSFET:** stands for metal-oxide semiconductor field-effect transistor.
- **NEMA 4X:** refers to watertight enclosures as defined by the National Electrical Manufacturers Association.
- **Nested:** refers to the position of the mast were no tubes have risen. The mast remains retracted. This position is sometimes referred to as “stowed”.

- **NPT:** stands for “American National Standard Pipe Thread” or “National Pipe Thread” for short; a United States standard for thread specifications on pipes and fittings. NPT threads are tapered.
- **N-m:** stands for Newton Meters, which is a unit of torque equal to the force of one newton applied perpendicularly to a moment arm, which is one meter long.
- **OD:** stands for Outside Diameter or the diameter to the outside edge of a circle.
- **Payload:** refers to the object or equipment being raised by the mast to an operational height.
- **P/N:** stands for Part Number. These are The Will-Burt Company part numbers for various components in the mast system.
- **Top Tube:** refers to the tube with the smallest diameter. When the mast is fully extended, this is the tube furthest from the mounting surface.
- **Ø:** stands for diameter.

10.1.2 Mounting Position Terms

For the purposes of this manual, regions of the mounting location are defined as follows:

- **Mounting Structure:** the overall structure where the mast system is mounted.
- **Mounting Surface:** the surface to which the base of the mast is secured.
- **Support Structure:** the vertical surface to which the support bracket assembly is secured.

10.2 Guying

Stiletto masts are not typically guyed, however light guying is possible and can help with deflection. Only one level of guying is recommended.

In general, to guy the mast:

1. Prepare the mast system for operation (Section 6.1).

2. Secure the payload to the mast.

3. Attach the guy lines to the mast ensuring the guy lines do not interfere with any payload cables or intermediate payloads.

4. Prior to extending the mast, The Will-Burt Company recommends laying out any guy lines so they do not become tangled during extension (Figure 10-1).

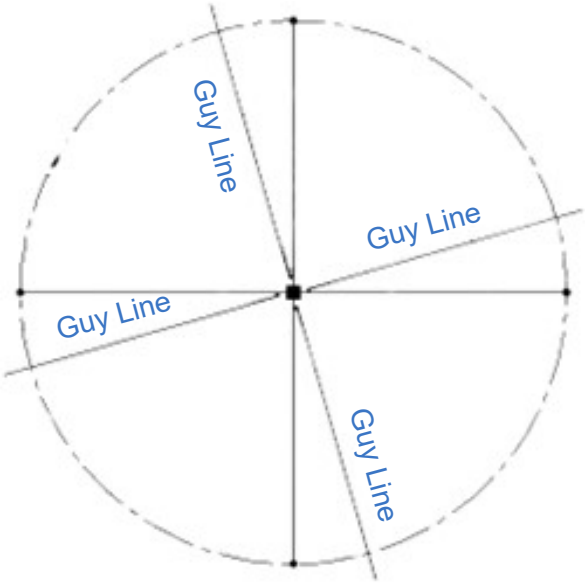

Figure 10-1 Lay Out Guy Lines

5. Extend the mast (Section 6).

6. Properly secure and tension the guy lines immediately after raising the mast. The installer shall verify the guy anchor point strength is adequate to support the guy line forces. All guy lines should be equally tensioned.

    a. Beginning at two locations opposite each other, gradually tension each guy line. Vertical alignment of the mast is accomplished by observing the mast perpendicularly to the two guy lines being tensioned to ensure the mast is standing straight and is not bending too far towards one side.

    b. Adjust the appropriate guy line as necessary to keep the mast plumb vertically. Check periodically.

10.3 Drawings

Refer to www.willburt.com for drawings of your mast system.