CUSTOMER DRAWING 1 OF 1

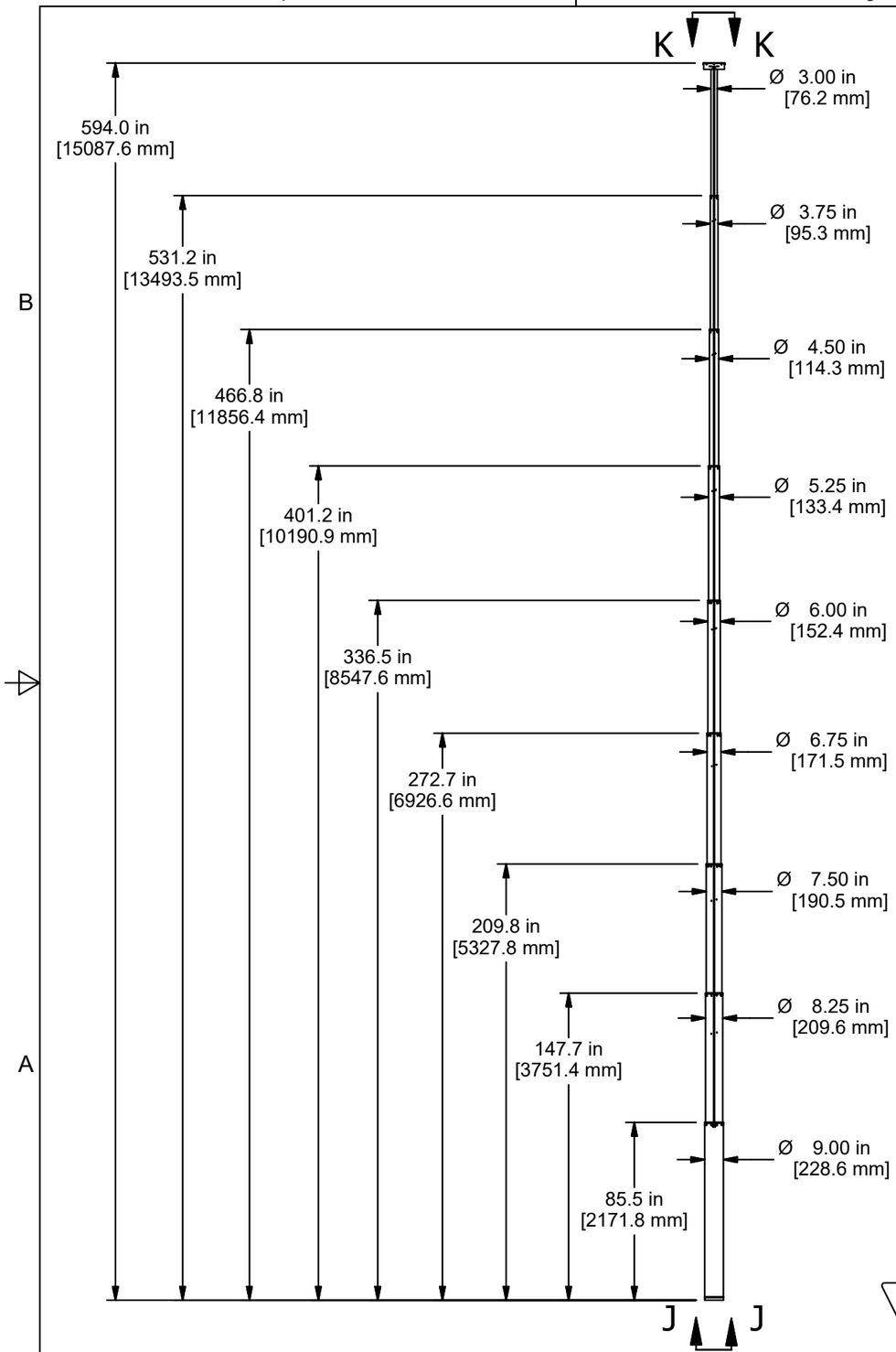

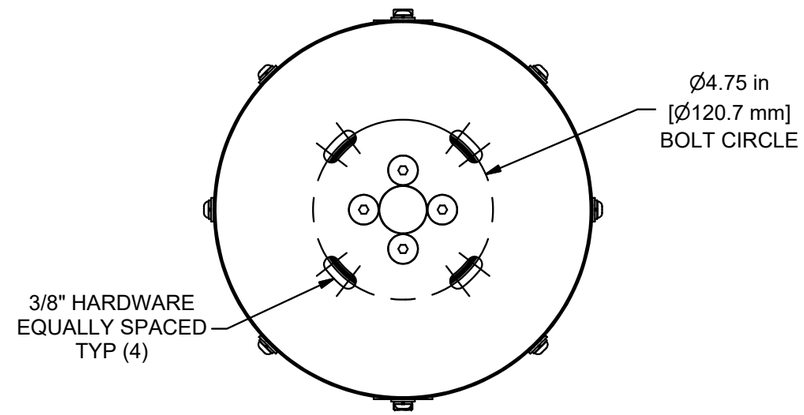

VIEW K-K
PAYLOAD MOUNTING
PATTERN

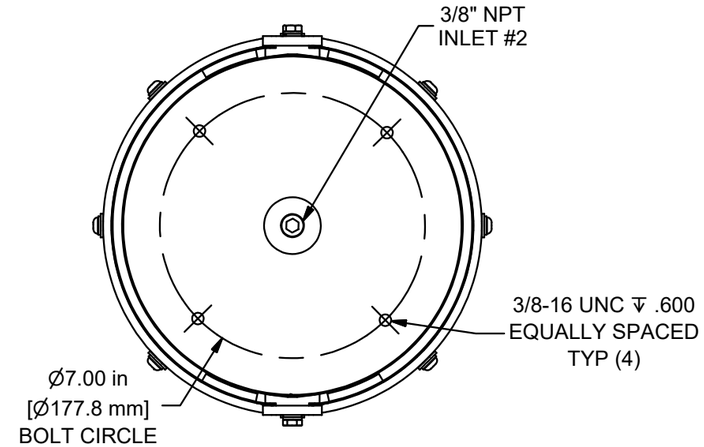

VIEW J-J

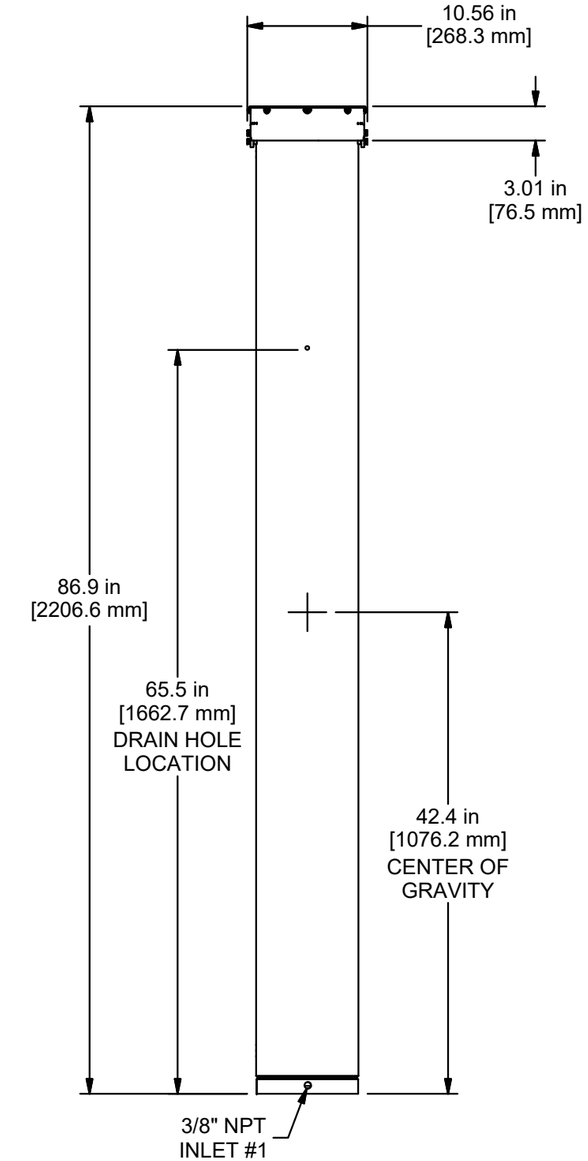

NOTES:

1. ALL DIMENSIONS WITHOUT BASE PLATE.

MATERIAL:	**PROPRIETARY AND CONFIDENTIAL** THE INFORMATION CONTAINED IN THIS DRAWING IS THE SOLE PROPERTY OF THE WILL-BURT COMPANY ANY REPRODUCTION IN PART OR WHOLE WITHOUT THE WRITTEN PERMISSION OF THE WILL-BURT COMPANY IS PROHIBITED.	WILL-BURT **AN EMPLOYEE OWNED COMPANY** ORRVILLE, OH
FINISH: CLEAR ANODIZE	UNLESS OTHERWISE SPECIFIED DIMENSIONS ARE IN **INCHES**	TITLE: PNEU MAST 7.3-50 HDNL LOW PRO CLR ADZ CUSTOMER DRAWING
DRAWING NOT TO SCALE	THIRD ANGLE PROJECTION	P/N: 710305000 · DATE: 11/12/2014 · DRAWN BY: CJY
ALL DIMENSIONS AND PERFORMANCE PARAMETERS ARE PROVIDED FOR REFERENCE ONLY AND ARE SUBJECT TO CHANGE WITHOUT NOTICE.		APPROXIMATE WEIGHT: N/A · TUBE SET: 3.00" - 9.00" · REV 00