CUSTOMER INTERFACE DRAWING
ECN 11378 - REV. 00 - 12-4-2012

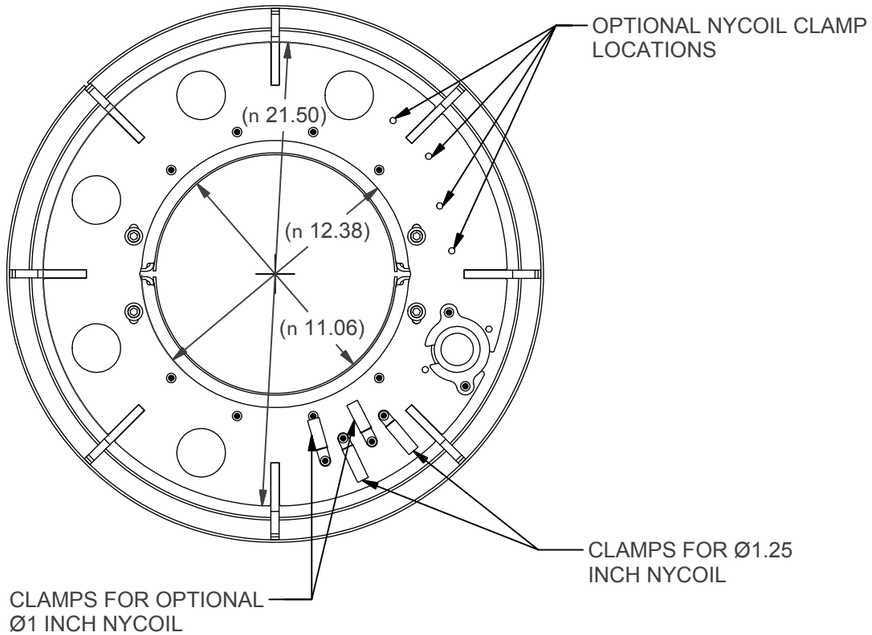


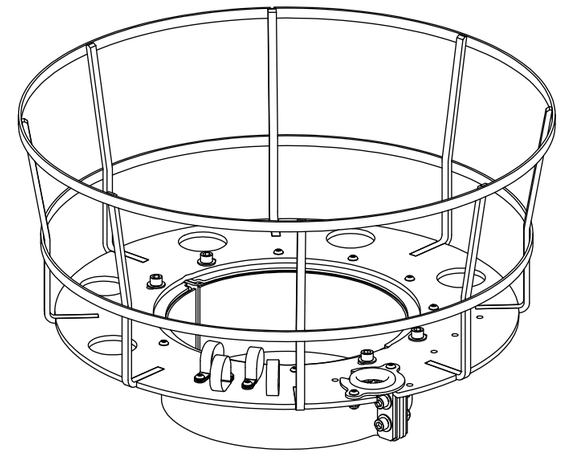

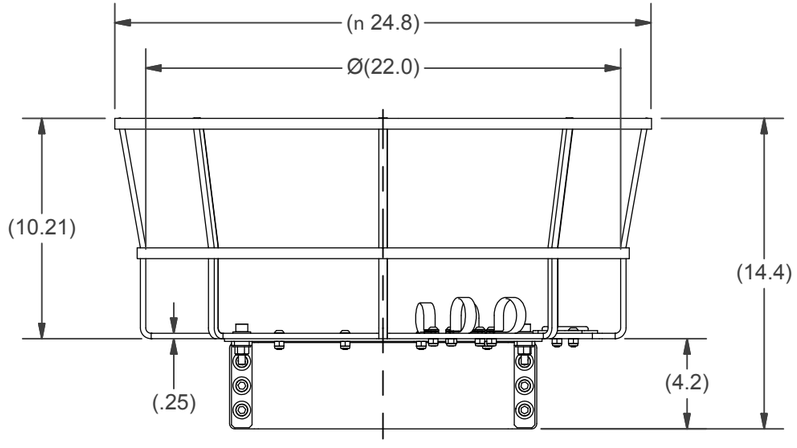


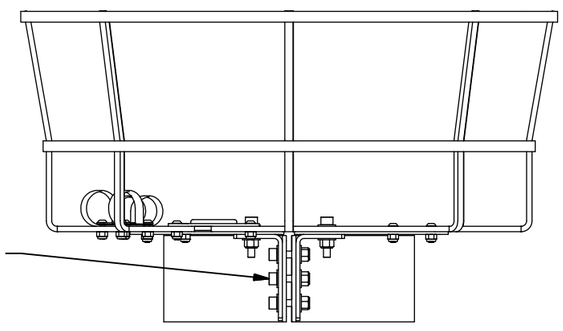


REFERENCE APPLICATION INFORMATION:
BASKET WEIGHT: 28.4
FITS STILETTO HD BASE TUBE Ø11.06
Ø1.25 INCH NYCOIL
OPTIONAL CLAMPS FOR Ø1 INCH NYCOIL

| | | | |
|---|---|---|---|
| MATERIAL (STEEL) | **UNLESS OTHERWISE SPECIFIED DIMENSIONS ARE IN INCHES.** TOLERANCES ON DECIMALS: 0 = ± 0.030; 00 = ± 0.010; 000 = ± 0.005; FRACTIONAL ± 1/64"; ANGLES ± 1/2°<br>1. ALL INSIDE EDGES TO HAVE .005" TO .035" FILLETS.<br>2. ALL OUTSIDE EDGES TO HAVE .005" TO .015" CHAMFER OR RADIUS.<br>125 ON ALL MACHINED SURFACES | **PROPRIETARY AND CONFIDENTIAL**<br>THE INFORMATION CONTAINED IN THIS DRAWING IS THE SOLE PROPERTY OF THE WILL-BURT COMPANY ANY REPRODUCTION IN PART OR WHOLE WITHOUT THE WRITTEN PERMISSION OF THE WILL-BURT COMPANY IS PROHIBITED. | WILL-BURT **AN EMPLOYEE OWNED COMPANY** ORRVILLE, OH |
| FINISH (POWDER COAT BLACK) | | | TITLE: NYCOIL BASKET ASM - 6M HD STILETTO |
| APPROX. WT:28.4 lbmass | | APPROVALS / DATE | SIZE: B / DWG NO: 48803 / REV: 00 |
| THIRD ANGLE PROJECTION | | DRAWN: kvandegrift / 12/4/2012 | |
| | | CHECKED | PN: 4880301 / SHEET 1 OF 2 |